METRIC 521-8329

QTY	CONNECTION	SIZE	SHEETS
1	FUEL INLET	3/4-14 NPSM	2,5
1	EXCESS FUEL RETURN	1 3/16-12 THD	2,5
1	EXHAUST	DETAIL	4,6,7
2	FUMES DISPOSAL HOSE	ø57.2 [ø2.25] OD	4,5
1	OIL DRAIN	1 3/16-12 THD	2,5
1	RADIATOR DRAIN	1/2-14 NPT	2,3,4

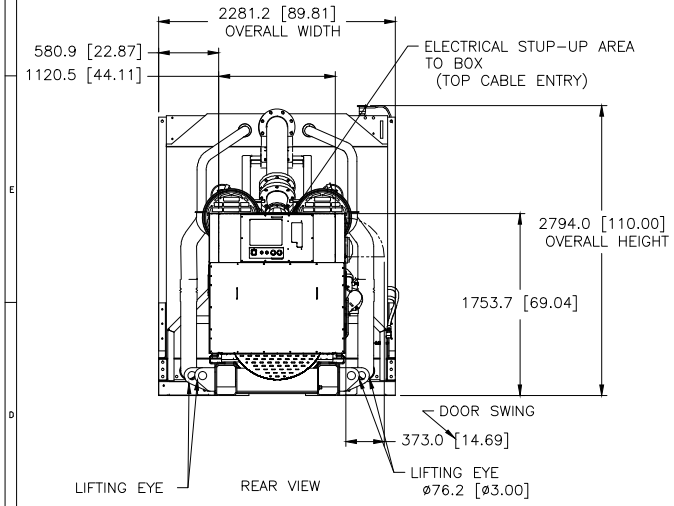

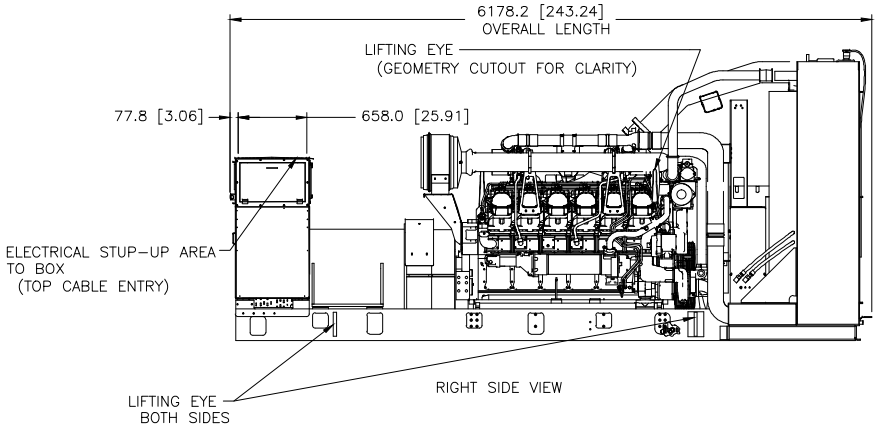

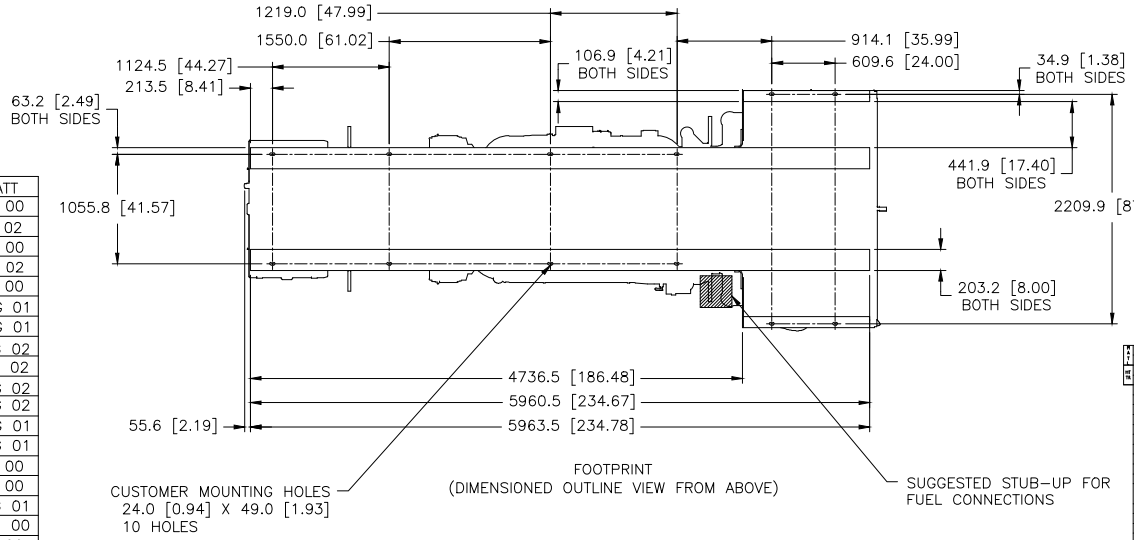

MODEL	TYPE	PRICING AR	MANDATORY ATT
3512C	–	LF-2925 CHG 03 LF-3417 CHG 02	LF-2672 CHG 00
			LF-2722 CHG 02
			LF-2830 CHG 00
			LF-2844 CHG 02
			LF-2849 CHG 00
			491-5899 CHG 01
			491-5899 CHG 01
			491-5896 CHG 02
			491-5896 CHG 02
			491-5856 CHG 02
			491-5856 CHG 02
			375-2296 CHG 01
			311-7115 CHG 01
			LF-1344 CHG 00
			LF-2728 CHG 00
			519-0618 CHG 01
			325-6244 CHG 00
			LF-3053 CHG 00
			LF-1870 CHG 02
			283-2549 CHG 00
			473-4535 CHG 00
			367-5169 CHG 00
			LF-1319 CHG 01
			LF-1349 CHG 00

PACKAGE LIFTED IN 3 PLACES WITH RADIATOR INSTALLED

PACKAGE SHOWN WITH MORE DETAIL ON FOLLOWING SHEETS

REV	SYM	DESCRIPTION	DATE
1	E	E2966B IDENT	
1	E	E2733 DRAWING-AUTOCAD	
1	E	E0138W BRAND MARKINGS	
1	E	E0013Q CONFIDENTIALITY	
1	E	E0172A INTERPRETATION	
1	E	E0011 INTPR & TOL	

DRN H.ZHAO
CHK M.J.SWIFT
APPD N.P. MOUNTJOY
ENG SUPT
FINISH
OTHER RECORDS X
UNLESS OTHERWISE SPECIFIED
DIMENSIONS ARE IN MM [INCH]
DIMENSIONS W/O TOL ARE BASIC
SCALE 1 = 16
THIRD ANGLE PROJECTION
SHEET 1 OF 7
ENG 02 DATE 21MAY18

CATERPILLAR INC.

THE INFORMATION HEREON IS THE PROPERTY OF CATERPILLAR INC. AND ITS SUBSIDIARIES AND MAY NOT BE REPRODUCED, OR DISCLOSED, TRANSMITTED, OR USED IN ANY MANNER WITHOUT THE WRITTEN CONSENT OF CATERPILLAR INC. OR ITS SUBSIDIARIES.

INSTALLATION-ENGINE
3512C HD LV 60 HZ 1750KW
521-8329 LVR – DES SYM X CONTROL W855 E