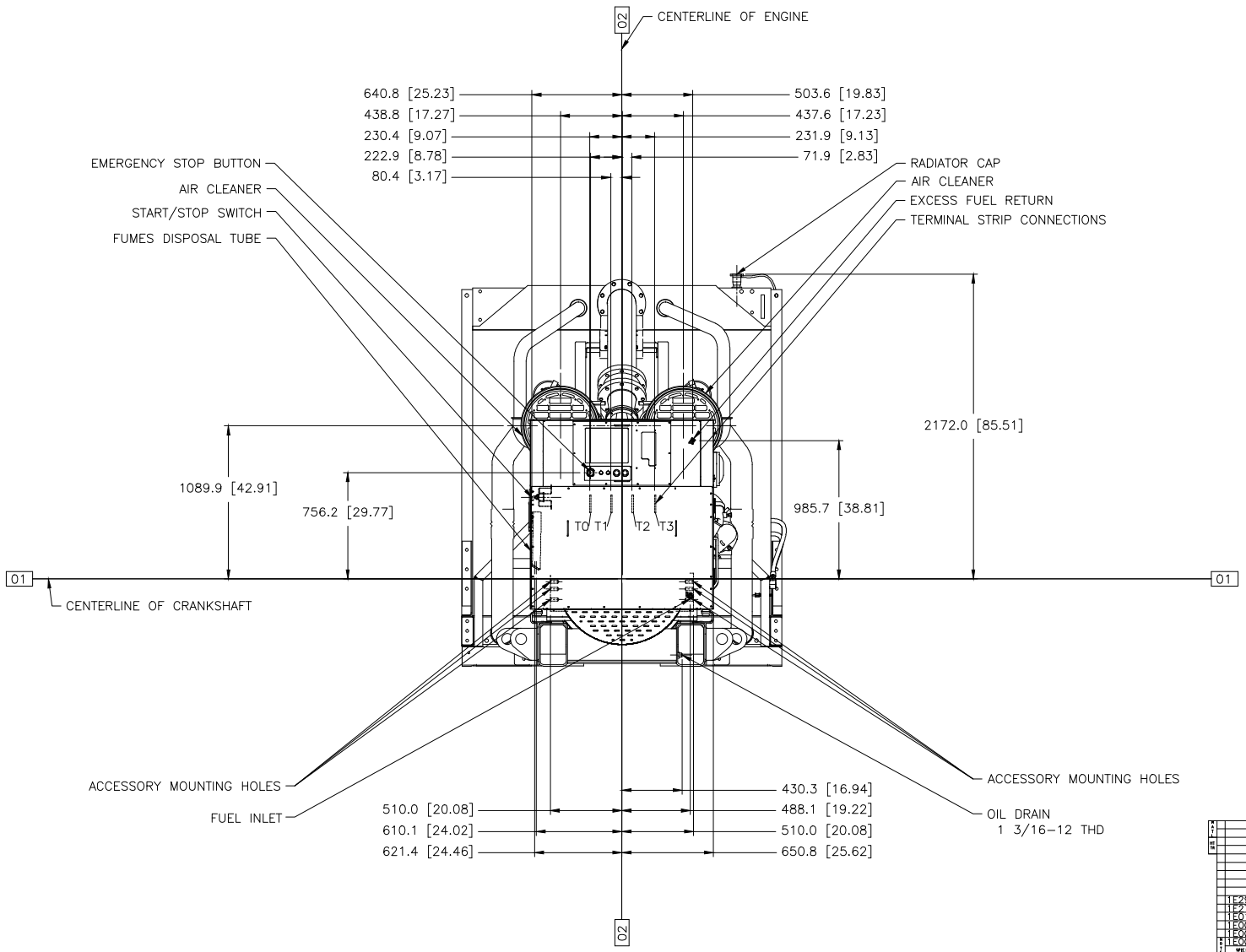

CAT 3512C-HD LV 60HZ 1750KW GENSET
DWG# 521-8329 CHG 02
METRIC [INCH]
REAR VIEW
LF-2925 CHG 03 SHOWN

REV	SPEC NO.	NAME
1	E2966B	IDENT
1	E2733	DRAWING-AUTOCAD
1	E0138W	BRAND MARKINGS
1	E0013C	CONFIDENTIALITY
1	E0012A	INTERPRETATION
1	E0011	INTPR & TOL

DRN H.ZHAO
CHK M.J.SWIFT
APPD N.P. MOUNTJOY
DIM. SUP. | EXP | PR. | FRMB.
OTHER RECORDS X
UNLESS OTHERWISE SPECIFIED
DIMENSIONS ARE IN MM [INCH]
DIMENSIONS W/O TOL ARE BASIC
SCALE 1 = 10
THIRD ANGLE PROJECTION
SHEET 5 OF 7
CHG 02 DATE 21MAY18

CATERPILLAR INC.

THE INFORMATION HEREON IS THE PROPERTY OF CATERPILLAR INC. AND/OR ITS SUBSIDIARIES, REPRODUCTION, DISTRIBUTION, OR DISPLAY TO THIRD PARTIES WITHOUT PRIOR WRITTEN PERMISSION, IS STRICTLY PROHIBITED.

INSTALLATION-ENGINE
3512C HD LV 60HZ 1750KW
521-8329 — REF DIM X CONTROL W855 E