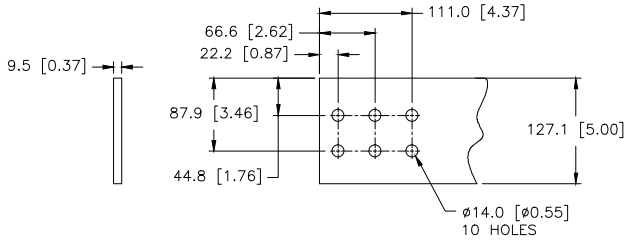

DETAIL OF TERMINAL STRIP CONNECTIONS
(T0, T1, T2, T3)
SCALE 1=2

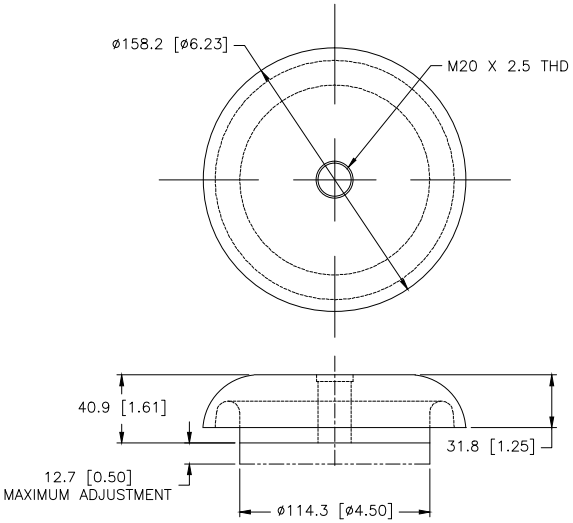

DETAIL OF MOUNTING GP ISOLATOR
(SHIPPED LOOSE)
SCALE 1=1

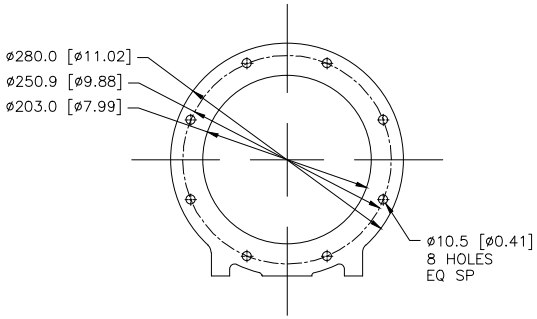

DETAIL OF EXHAUST
SCALE 1=2

REV		
1E2966B	IDENT	
1E2733	DRAWING-AUTOCAD	
1E0138W	BRAND MARKINGS	
1E0013C	CONFIDENTIALITY	
1E0122A	INTERPRETATION	
1E0011	INTPR & TOL	
SPEC NO.	NAME	
DRN	H.ZHAO	
CHK	M.J. SWIFT	
APPD	N.P. MOUNTJOY	
CONT ENGR	EXP	PROD
RECORDS	X	

UNLESS OTHERWISE SPECIFIED:
DIMENSIONS ARE IN MM [INCH]
DIMENSIONS W/O TOL ARE BASIC

SCALE 1 = 10
SHEET 7 OF 7
THIRD ANGLE PROJECTION
CHG 02 DATE 21MAY18

CATERPILLAR INC.

THE INFORMATION HEREON IS THE PROPERTY OF CATERPILLAR INC. AND/OR ITS SUBSIDIARIES AND MAY BE PROTECTED BY COPYRIGHT, TRADEMARK OR PATENT RIGHTS. ANY REPRODUCTION, DISTRIBUTION OR USE FOR ANY PURPOSE OTHER THAN THE ORIGINAL PURPOSE IS PROHIBITED.

INSTALLATION-ENGINE
3512C HD LV 60HZ 1750KW

521-8329 | LSR - | DES 24 SUB | CONTROL WB55 | E