METRIC 524–1257

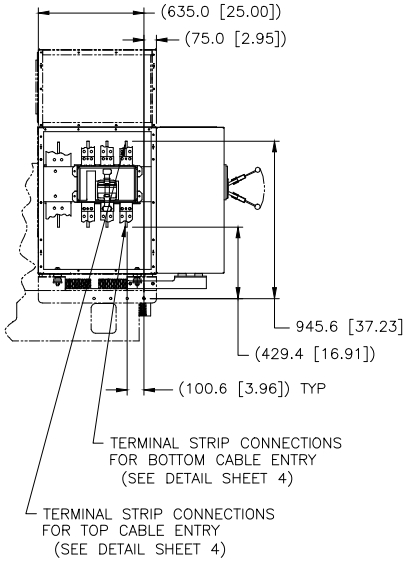

LEFT SIDE VIEW

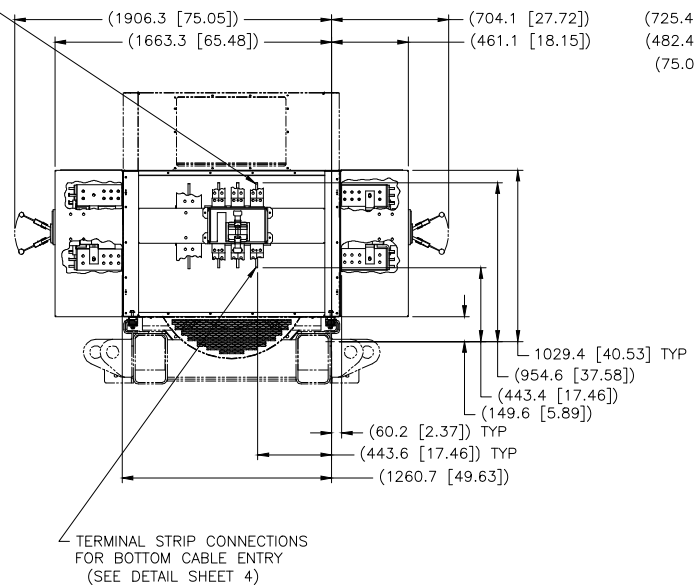

REAR VIEW

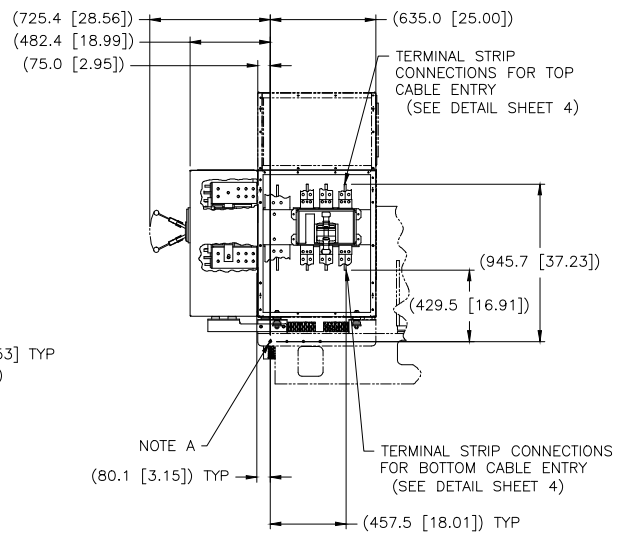

RIGHT SIDE VIEW

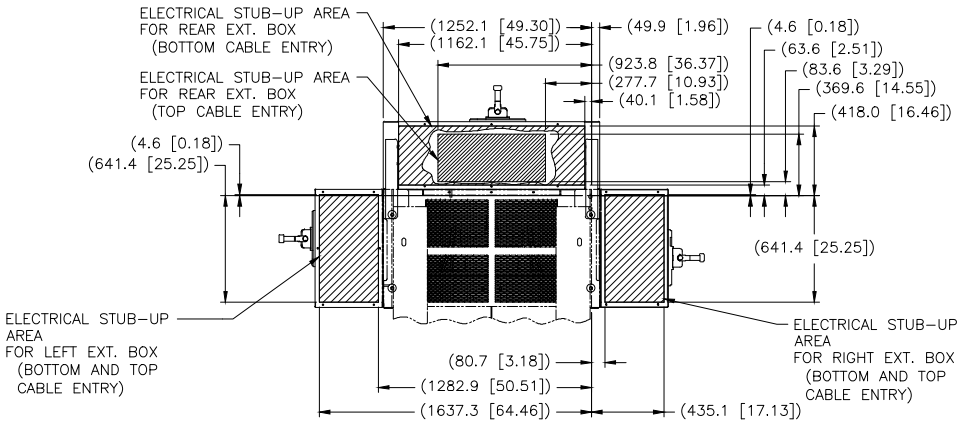

BOTTOM VIEW
OF REAR

MODEL	AMPS	OPERATED	RATED	POLES
3512	2000	MANUALLY	IEC	3
	2500			
	3200			

NOTE A: ALL DIMENSIONS REFERENCE THE SLIDER BRACKET (FOR MAIN BOX)

NOTE B: EXTENSION BOX COVERS OMITTED AS REQUIRED FOR CLARITY

1E2733	DRAWING–AUTOCAD
1E0198	WEBRAND MARKINGS
1E0011	INTPR & TOL
SPEC NO.	NAME
DRN	B.R.VILLENA
CHK	M.J. SWIFT
APPD	N. MOUNTJOY
CONT ENGR	EXP
PROD ENGR	PROD X

UNLESS OTHERWISE SPECIFIED
DIMENSIONS ARE IN mm [INCH]
DIMENSIONS W/O TOL ARE BASIC

SCALE 1 = 10
SHEET 3 OF 10
THIRD ANGLE PROJECTION
00 24OCT16
CHG DATE

CATERPILLAR INC.

THE INFORMATION HEREON IS THE PROPERTY OF CATERPILLAR INC. AND/OR ITS SUBSIDIARIES, MAY NOT BE REPRODUCED, OR COPIED, TRANSMITTED, OR DISCLOSED WITHOUT WRITTEN PERMISSION, AND IS OFFERED FOR SALE OR LEASE ONLY UNDER WRITTEN AGREEMENT OR CONTRACT.

INSTALLATION–ATTACHMENT
CIRCUIT BREAKERS FOR ICE

524–1257 – SIZE E SUB W983 E