METRIC 524-1257

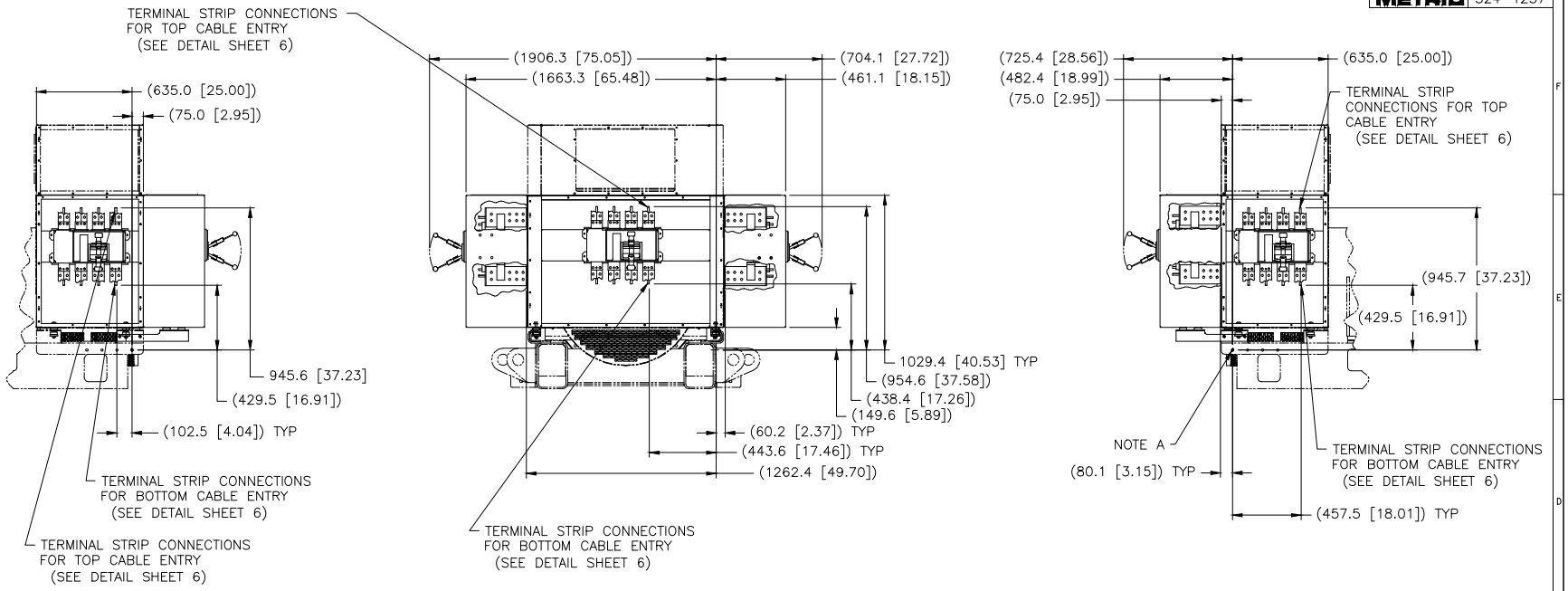

LEFT SIDE VIEW

REAR VIEW

RIGHT SIDE VIEW

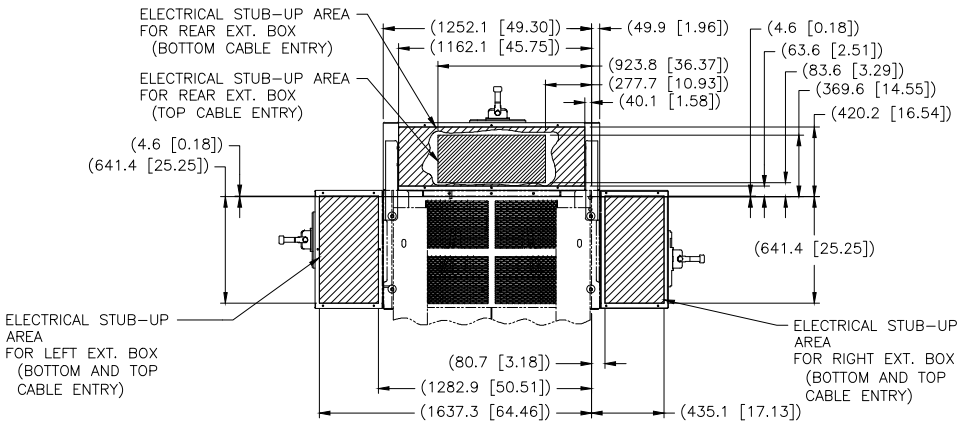

BOTTOM VIEW OF REAR

NOTE A: ALL DIMENSIONS REFERENCE THE SLIDER BRACKET (FOR MAIN BOX)

NOTE B: EXTENSION BOX COVERS OMITTED AS REQUIRED FOR CLARITY

MODEL	AMPS	OPERATED	RATED	POLES
3512	2000	MANUALLY	IEC	4
	2500			

1E2733 DRAWING-AUTOCAD
1E0198WBRAND MARKINGS
1E0011 INTPR & TOL
SPEC NO. NAME
DRN B.R.VILLENA
CHK M.J. SWIFT
APPD N. MOUNTJOY
CONT DEPT EXP PROD PROD. X
UNLESS OTHERWISE SPECIFIED DIMENSIONS ARE IN MM [INCH] DIMENSIONS W/O TOL ARE BASIC
SCALE 1 = 10
SHEET 5 OF 10
THIRD ANGLE PROJECTION
00 24OCT16
CHG DATE
CATERPILLAR INC.
INSTALLATION-ATTACHMENT
CIRCUIT BREAKERS FOR ICE
524-1257
DES SUB W983 E