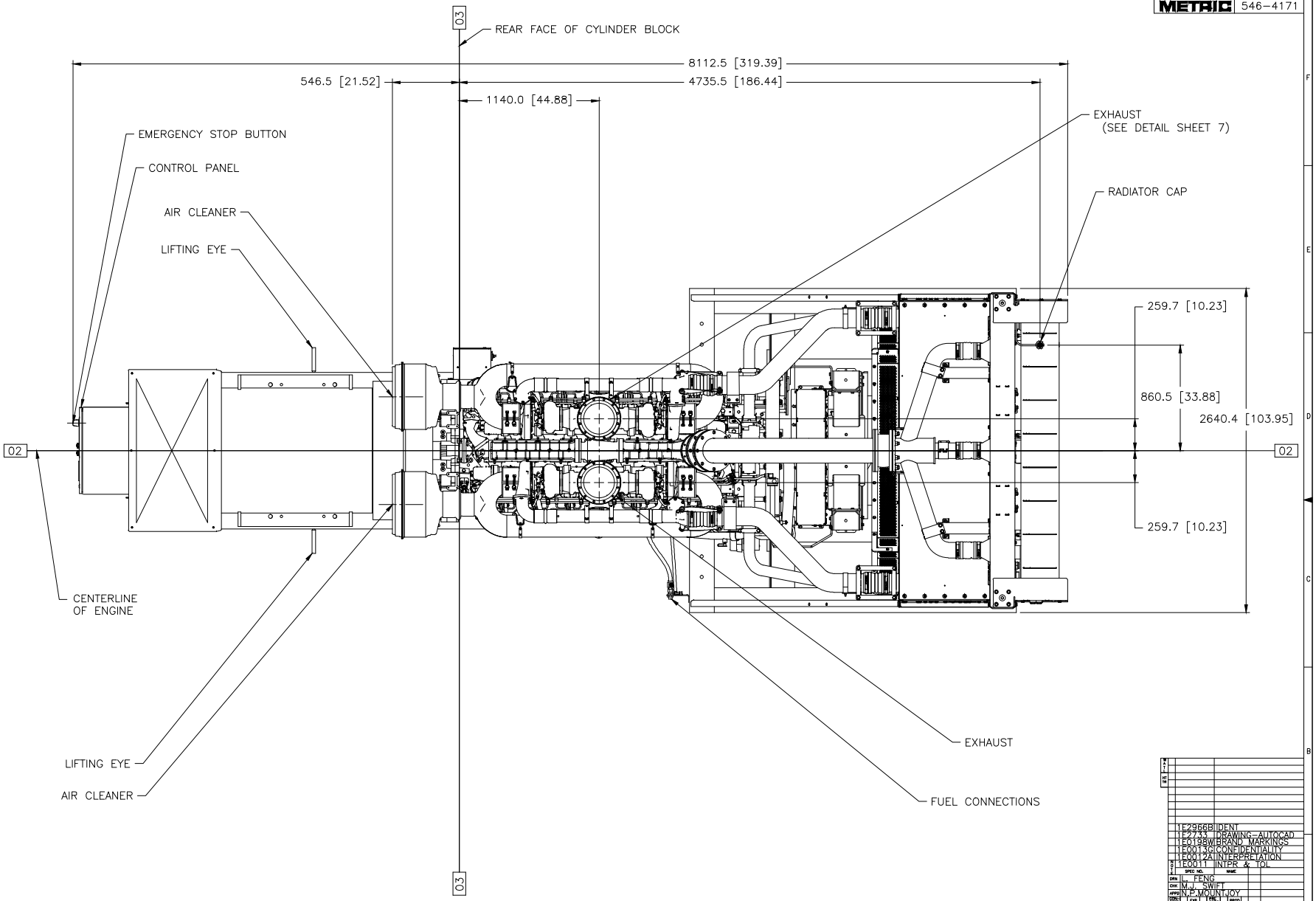

CAT 3516E 60HZ LV/MV PKG 2750KW
DWG# 546-4171 CHG 01
METRIC [INCH]
TOP VIEW
LF-3213 CHG 00 W/ATTACHMENTS SHOWN

1E2966B	IDENT
1E2733	DRAWING-AUTOCAD
1E0198W	BRAND MARKINGS
1E0013G	CONFIDENTIALITY
1E0012A	INTERPRETATION
1E0011	INTPR & TOL
SPEC NO.	NAME

DRN L. FENG
CHK M.J. SWIFT
APPD N.P.MOUNTJOY
CONT. DEPT | EXP | PROJ. | PROD.
RECORDS X

UNLESS OTHERWISE SPECIFIED
DIMENSIONS ARE IN MM [INCH]
DIMENSIONS W/O TOL ARE BASIC

SCALE 1 = 10
SHEET 5 OF 8
THIRD ANGLE PROJECTION
01 26JUN18
CHG DATE

CATERPILLAR INC.

THE INFORMATION CONTAINED IN THIS DRAWING IS THE PROPERTY OF CATERPILLAR INC. AND/OR ITS SUBSIDIARIES, WITHOUT WRITTEN PERMISSION, ANY COPYING, TRANSMITTAL TO OTHERS, AND ANY USE EXCEPT THAT FOR WHICH IT IS LOANED IS PROHIBITED.

INSTALLATION-ENGINE
3516E 60HZ LV/MV 2750KW

546-4171 | VER - | DES DO SUB | CONTROL W580 | E