METRIC 546-4171

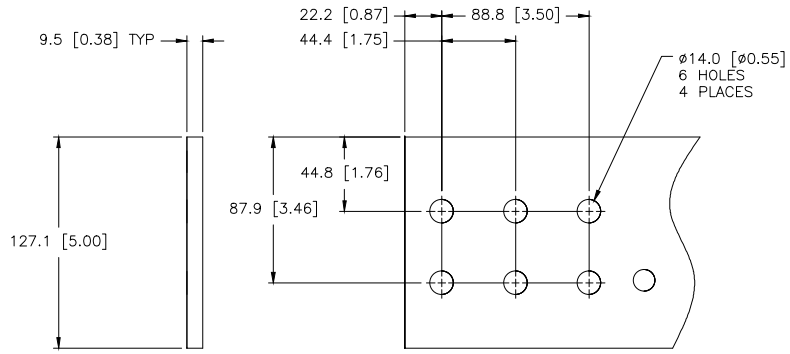

DETAIL OF 6-HOLE TERMINAL STRIP CONNECTIONS
(T0, T1, T2, T3)
SCALE 1=1

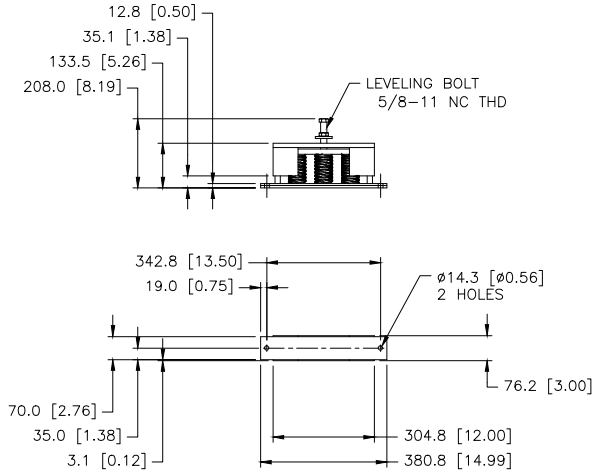

DETAIL OF VIBRATION ISOLATORS
SCALE 1=5

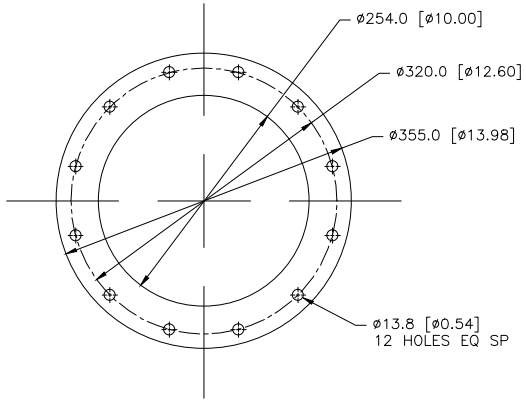

DETAIL OF EXHAUST
SCALE 1=2

REV	SPEC NO.	NAME	DATE
	1E2966B	IDENT	
	1E2733	DRAWING-AUTOCAD	
	1E0138W	BRAND MARKINGS	
	1E0013C	CONFIDENTIALITY	
	1E0122A	INTERPRETATION	
	1E0011	INTPR & TOL	

DRN L. FENG
CHK M.J. SWIFT
APPD N.P. MOUNTJOY
CONT DEPT EXP PROD MKG PROD
RECORDS X

UNLESS OTHERWISE SPECIFIED
DIMENSIONS ARE IN MM [INCH]
DIMENSIONS W/O TOL ARE BASIC

SCALE 1 = 10
WEIGHT(KG) LB
1 .0[kg] .0[lb]
THIRD ANGLE PROJECTION
SHEET 7 OF 8
CHG 01 DATE 26JUN18

CATERPILLAR INC.

THE INFORMATION HEREON IS THE PROPERTY OF CATERPILLAR INC. AND/OR ITS SUBSIDIARIES, WITHOUT WRITTEN PERMISSION, NO COPYING, TRANSFER OR DISCLOSURE TO THIRD PARTIES IS PERMITTED. THIS DOCUMENT IS A PROTOTYPE.

INSTALLATION-ENGINE
3516E 60HZ LV/MV 2750KW
546-4171 - SEQ 24 SUB 1 CONTROL W580 E