METRIC 552-7044

QTY	CONNECTION	SIZE	SHEETS
1	FUEL INLET	1/2-14 NPTF	2,3
1	EXCESS FUEL RETURN	1/2-14 NPTF	2,3
1	EXHAUST	DETAIL	2,4,6,7
1	FUMES DISPOSAL HOSE	ø50.8 [ø2.0] ID	2,4
1	OIL DRAIN	1-11-1/2 NPTF	2,3
1	COOLANT DRAIN	1/2-14 NPTF	2,3

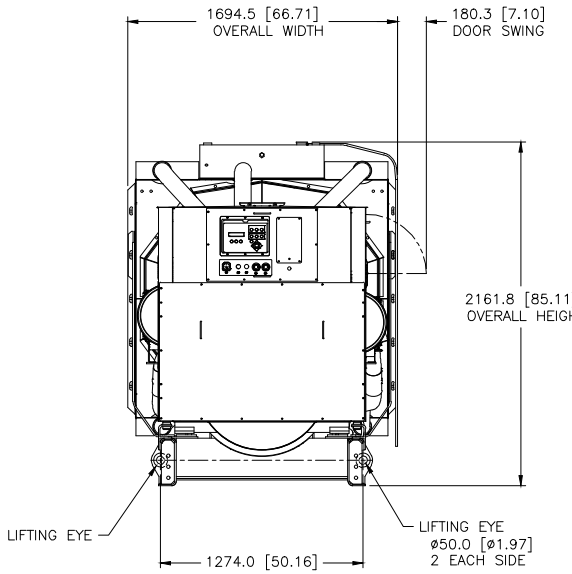

REAR VIEW

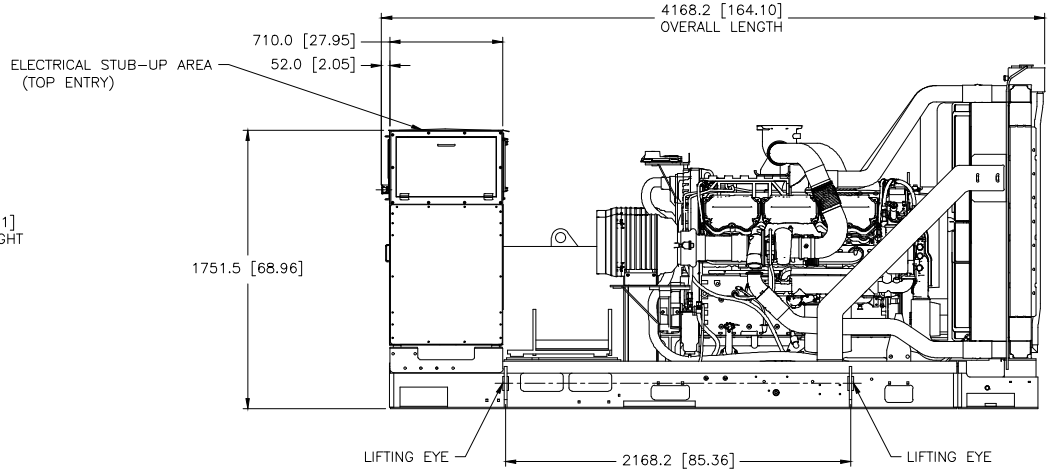

RIGHT SIDE VIEW

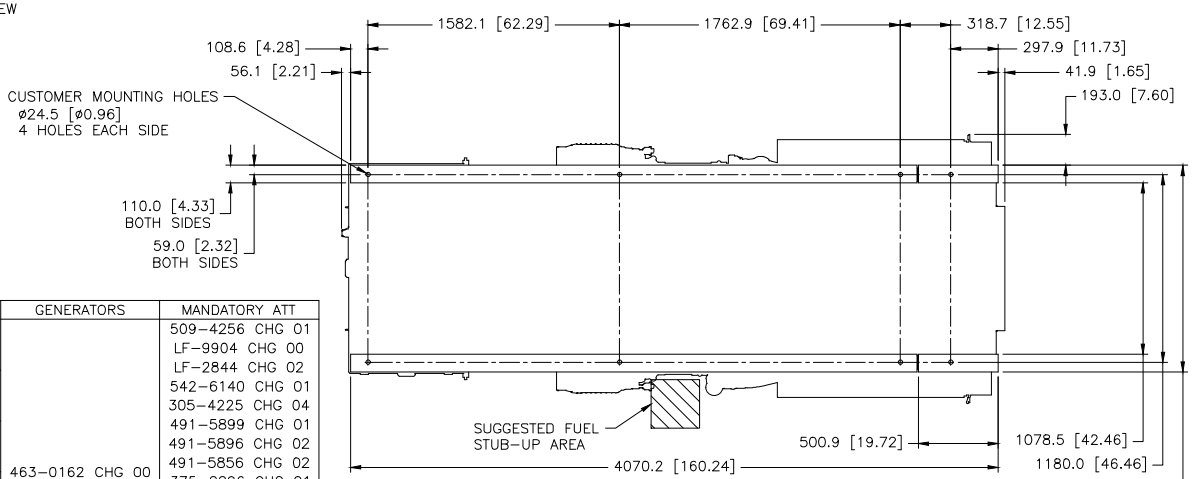

FOOTPRINT
(DIMENSIONED OUTLINE VIEW FROM ABOVE)

MODEL	TYPE	PRICING AR	GENERATORS	MANDATORY ATT
C32	6	LF-3554 CHG 02	463-0162 CHG 00	509-4256 CHG 01 LF-9904 CHG 00 LF-2844 CHG 02
		LF-3558 CHG 03		542-6140 CHG 01 305-4225 CHG 04
		LF-3538 CHG 01		491-5899 CHG 01 491-5896 CHG 02 491-5856 CHG 02
		LF-3552 CHG 02		375-2296 CHG 01 447-1538 CHG 01 447-1539 CHG 01
		LF-3540 CHG 01		GP-1545 CHG 00 LF-3622 CHG 00
		LF-3542 CHG 01		435-0408 CHG 00 330-5141 CHG 00 LS-0178 CHG 01

NOTE A: OIL REGULATOR NOT INCLUDED WITH LF-3554, LF-3558, LF-3538 AND LF-3540.

PACKAGE LIFTED IN 4 PLACES WITH RADIATOR INSTALLED
PACKAGE SHOWN WITH MORE DETAIL ON FOLLOWING SHEETS

1E2966B	IDENT
1E2733	DRAWING-AUTOCAD
1E0198W	BRAND MARKINGS
1E0013G	CONFIDENTIALITY
1E0012A	INTERPRETATION
1E0011	INTPR & TOL

DRN	J.E. NELSON	
CHK	L. FENG	
APPD	N.P. MOUNTJOY	
DESIGN	RECORDS	X

UNLESS OTHERWISE SPECIFIED
DIMENSIONS ARE IN MM [INCH]
DIMENSIONS W/O TOL ARE BASIC

SCALE 1 = 10
THIRD ANGLE PROJECTION
SHEET 1 OF 7

02 07NOV19
CHG DATE

CATERPILLAR INC.

THE INFORMATION HEREIN IS THE PROPERTY OF CATERPILLAR INC. AND/OR ITS SUBSIDIARIES. ANY USE OF WHICH IS PROHIBITED WITHOUT WRITTEN PERMISSION. ANY INFORMATION, DESIGN, DRAWING OR SPECIFICATION IS PROHIBITED.

INSTALLATION-ENGINE
C32 1000KW/1100KVA GENSET

552-7044 - DCS 24 SUB W982 E