METRIC 590-8248

QTY	CONNECTION	SIZE	SHEETS
1	FUEL INLET	1 3/16-12 THD	2,5,6
1	EXCESS FUEL RETURN	1 3/16-12 THD	2,5,6
1	EXHAUST	DETAIL	2,4,6,7
3	FUMES DISPOSAL HOSE	ø57.2 [ø2.25] OD	2,4,5
1	OIL DRAIN	1 3/16-12 THD	2,5
1	RADIATOR DRAIN	3/4-16 THD	2,3,4

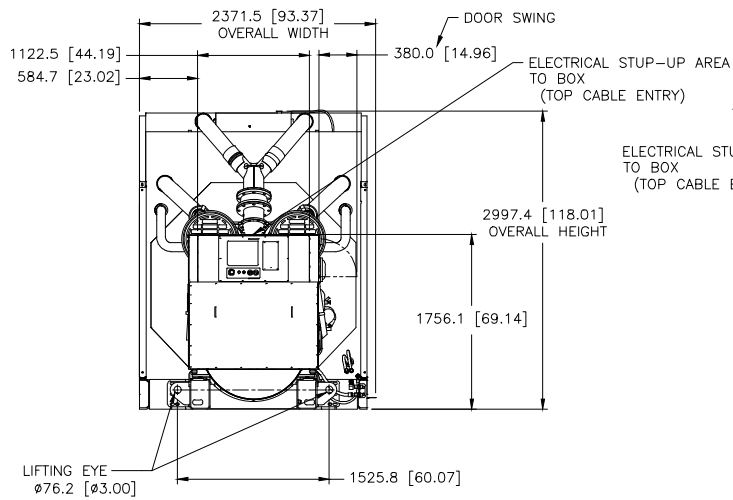

REAR VIEW

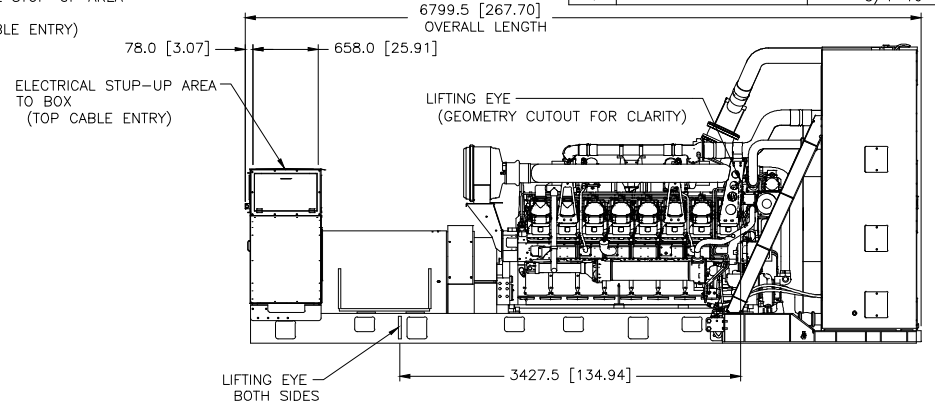

RIGHT SIDE VIEW

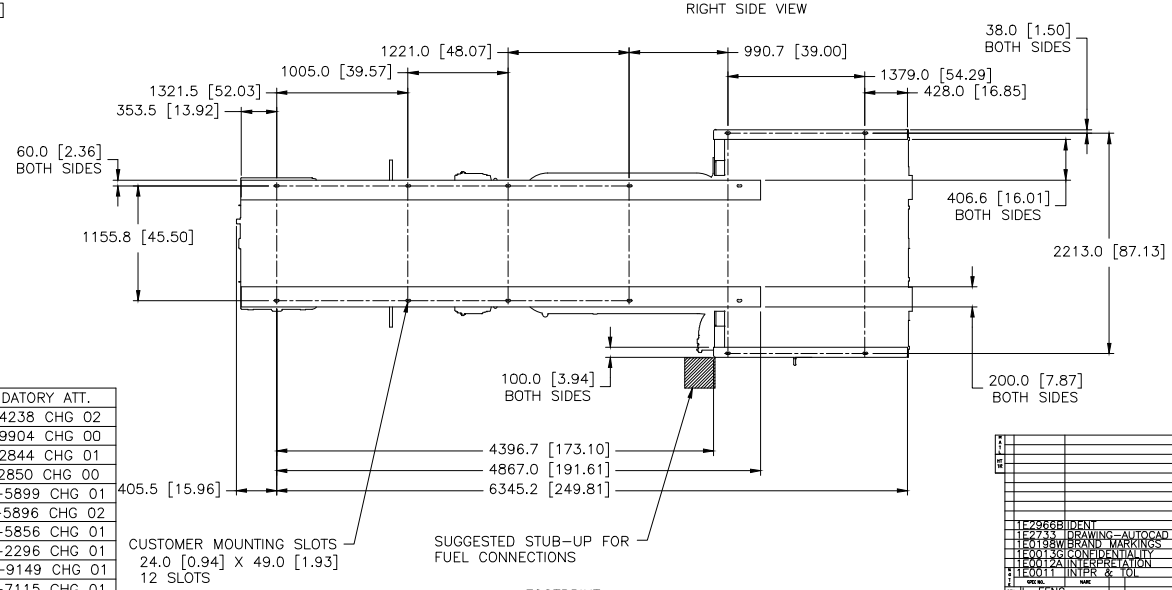

FOOTPRINT
(DIMENSIONED OUTLINE VIEW FROM ABOVE)
(RIGHT SIDE ORIENTATION)

MODEL	TYPE	PRICING AR	GENERATOR	MANDATORY ATT.
3516	–	LF-4462 CHG 00	DN-0210 CHG 00	LF-4238 CHG 02
				LF-9904 CHG 00
				LF-2844 CHG 01
				LF-2850 CHG 00
				491-5899 CHG 01
				491-5896 CHG 02
				491-5856 CHG 01
				375-2296 CHG 01
				510-9149 CHG 01
		LF-4464 CHG 00		311-7115 CHG 01
				LF-3366 CHG 00
				LA-9133 CHG 01
				325-6245 CHG 00
				282-0929 CHG 03
				469-1687 CHG 01
				367-5169 CHG 00
				LF-1136 CHG 01
				LF-1144 CHG 00

PACKAGE LIFTED IN 3 PLACES WITH RADIATOR INSTALLED

PACKAGE SHOWN WITH MORE DETAIL ON FOLLOWING SHEETS

1E2966B IDENT
1E2733 DRAWING-AUTOCAD
1E0198W BRAND MARKINGS
1E0013G CONFIDENTIALITY
1E0012A INTERPRETATION
1E0011 INTPR & TOL

DRN L. FENG
CHK M.J.SWIFT
APPR N.P. MOUNTJOY
TOP SIZE
DSGN RECORDS IX
UNLESS OTHERWISE SPECIFIED DIMENSIONS ARE IN MM [INCH] DIMENSIONS W/O TOL ARE BASIC
SCALE 1 = 16
SHEET 1 OF 7
01 22JUN20

CATERPILLAR INC.

INSTALLATION-ENGINE
3516CHD 60HZ LV/MV
590-8248 W580 E