METRIC 590-8249

| QTY | CONNECTION | SIZE | SHEETS |
|---|---|---|---|
| 1 | FUEL INLET | 1 3/16-12 THD | 2,5,6 |
| 1 | EXCESS FUEL RETURN | 1 3/16-12 THD | 2,5,6 |
| 1 | EXHAUST | DETAIL | 2,4,6,7 |
| 2 | FUMES DISPOSAL HOSE | ø57.2 [ø2.25] OD | 4,5 |
| 1 | OIL DRAIN | 1 1/2-12-2B THD | 2,5 |
| 1 | RADIATOR DRAIN | 3/4-16 THD | 2,3,4 |

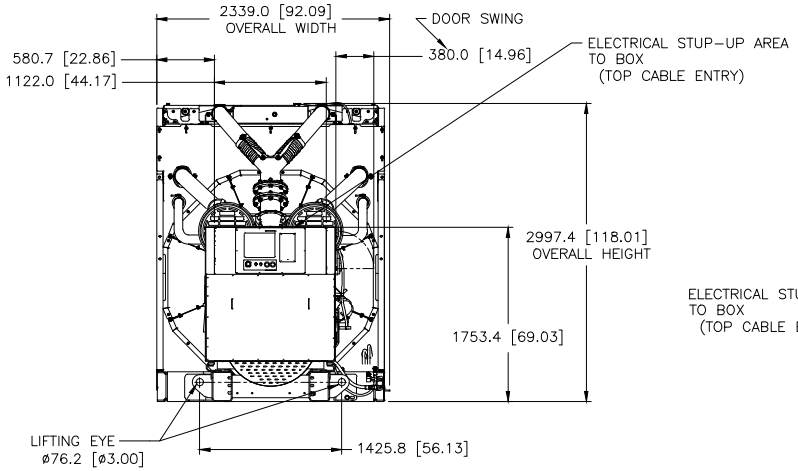


REAR VIEW

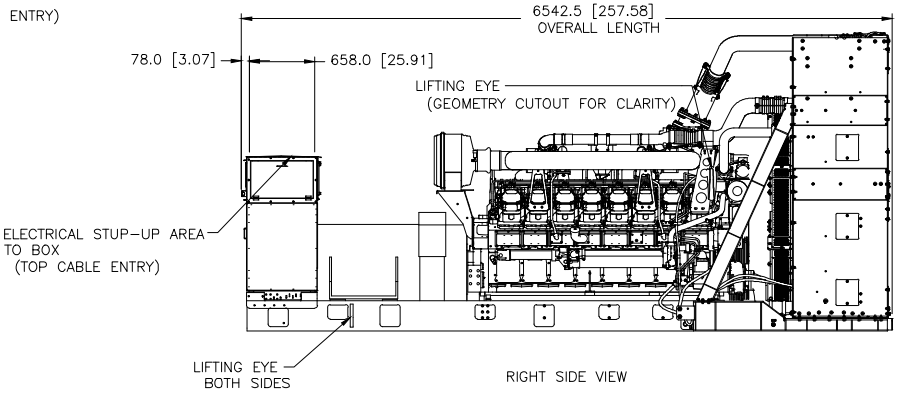


RIGHT SIDE VIEW

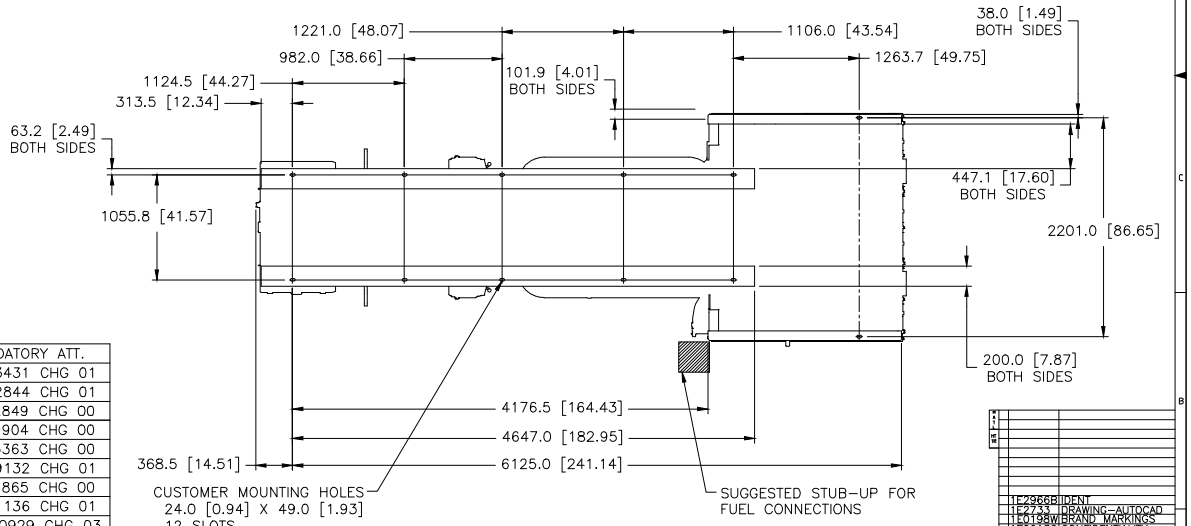


FOOTPRINT
(DIMENSIONED OUTLINE VIEW FROM ABOVE)
(RIGHT SIDE ORIENTATION)

| MODEL | TYPE | PRICING AR | GENERATOR | MANDATORY ATT. |
|---|---|---|---|---|
| 3516 | – | LF-4452 CHG 00 | LF-2673 CHG 00 | LF-3431 CHG 01 |
| | | | | LF-2844 CHG 01 |
| | | | | LF-2849 CHG 00 |
| | | | | LF-9904 CHG 00 |
| | | | | LF-3363 CHG 00 |
| | | | | LA-9132 CHG 01 |
| | | | | LF-1865 CHG 00 |
| | | | | LF-1136 CHG 01 |
| | | | | 282-0929 CHG 03 |
| | | | | 510-9149 CHG 01 |
| | | LF-4450 CHG 00 | | 491-5899 CHG 01 |
| | | | | 491-5896 CHG 02 |
| | | | | 491-5856 CHG 02 |
| | | | | 375-2296 CHG 01 |
| | | | | 311-7115 CHG 01 |
| | | | | 325-6244 CHG 00 |
| | | | | LF-1144 CHG 00 |
| | | | | 469-1687 CHG 01 |
| | | | | 367-5169 CHG 00 |

PACKAGE LIFTED IN 3 PLACES WITH RADIATOR INSTALLED

PACKAGE SHOWN WITH MORE DETAIL ON FOLLOWING SHEETS

1E2966B IDENT
1E2733 DRAWING-AUTOCAD
1E0198W BRAND MARKINGS
1E0013G CONFIDENTIALITY
1E0012A INTERPRETATION
1E0011 INTPR & TOL

| | | |
|---|---|---|
| DRN | M.J.SWIFT | |
| CHK | M.J.SWIFT | |
| APPR | N.P. MOUNTJOY | |
| DSGN | RECORDS | X |

UNLESS OTHERWISE SPECIFIED
DIMENSIONS ARE IN MM [INCH]
DIMENSIONS W/O TOL ARE BASIC

SCALE 1 = 16
SHEET 1 OF 7
NEXT ASSY / PROJECTION
00 01OCT19
CHK DATE

CATERPILLAR INC.

THE INFORMATION CONTAINED IN THE PROPERTY OF CATERPILLAR INC. AND/OR ITS SUBSIDIARIES, AND/OR ANY OTHER PERSON WHICH IS OR IS SUBSIDIARY OF CATERPILLAR INC. AND/OR ITS SUBSIDIARIES, AND/OR ANY OTHER PERSON WHICH IS OR IS SUBSIDIARY OF CATERPILLAR INC. AND/OR ITS SUBSIDIARIES, IS PROHIBITED.

INSTALLATION-ENGINE
3516C 60HZ LV/MV

590-8249 | SIZE – | REV | CONTROL | W580 | E