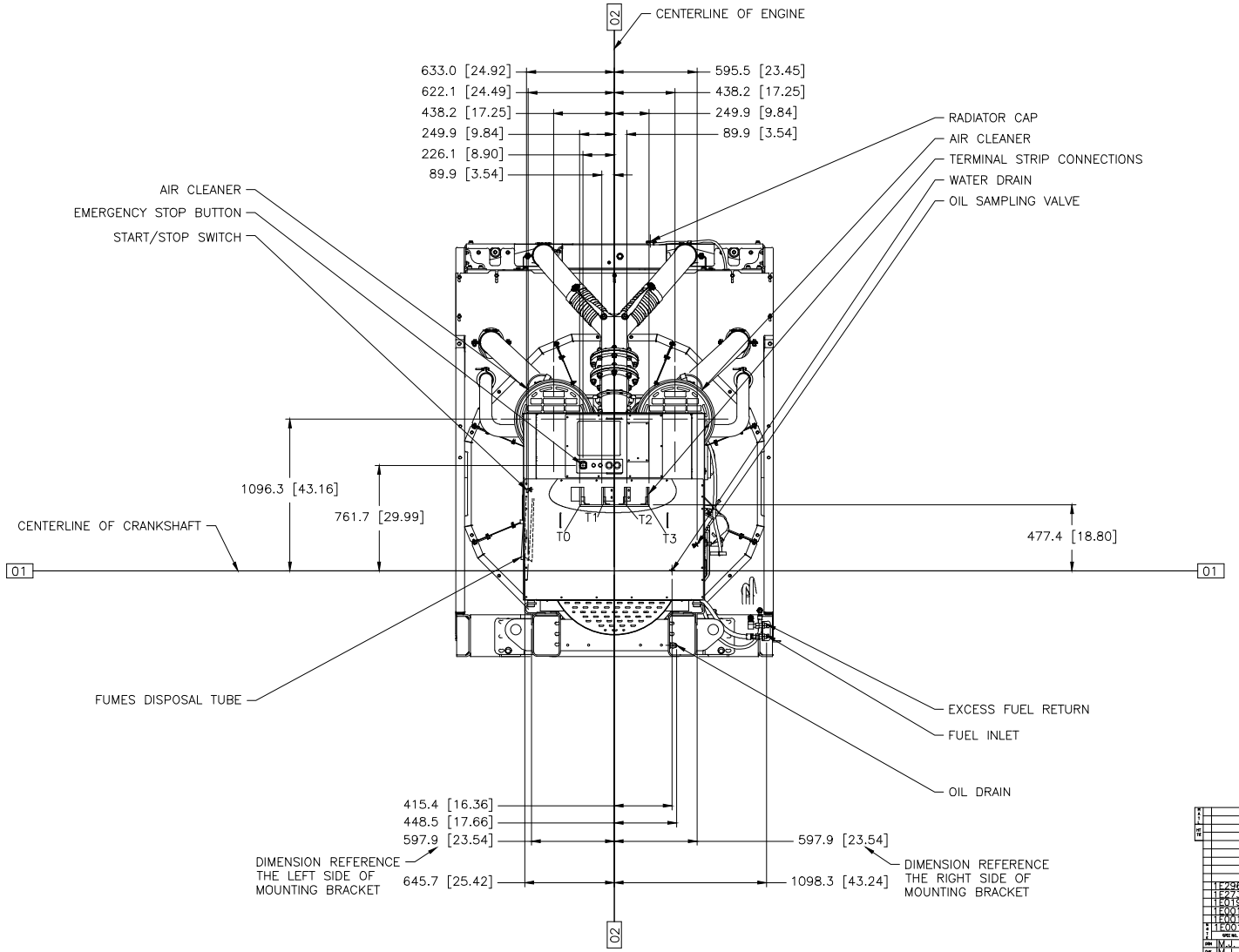

CAT 3516C 60HZ LV/MV
DWG# 590-8249 CHG 00
METRIC [INCH]
REAR VIEW
LF-4452 CHG 00 SHOWN

1E2966B	IDENT
1E2733	DRAWING-AUTOCAD
1E0198W	BRAND MARKINGS
1E0013G	CONFIDENTIALITY
1E0012A	INTERPRETATION
1E0011	INTPR & TOL

DRN	M.J. SWIFT
CHK	M.J. SWIFT
APPR	N.P. MOUNTJOY
RECORDS	X

UNLESS OTHERWISE SPECIFIED
DIMENSIONS ARE IN MM [INCH]
DIMENSIONS W/O TOL ARE BASIC
SCALE 1 = 10
SHEET 5 OF 8
00 01OCT19

CATERPILLAR INC.

INSTALLATION-ENGINE
3516C 60HZ LV/MV
590-8249 W580 E