METRIC 593-3169

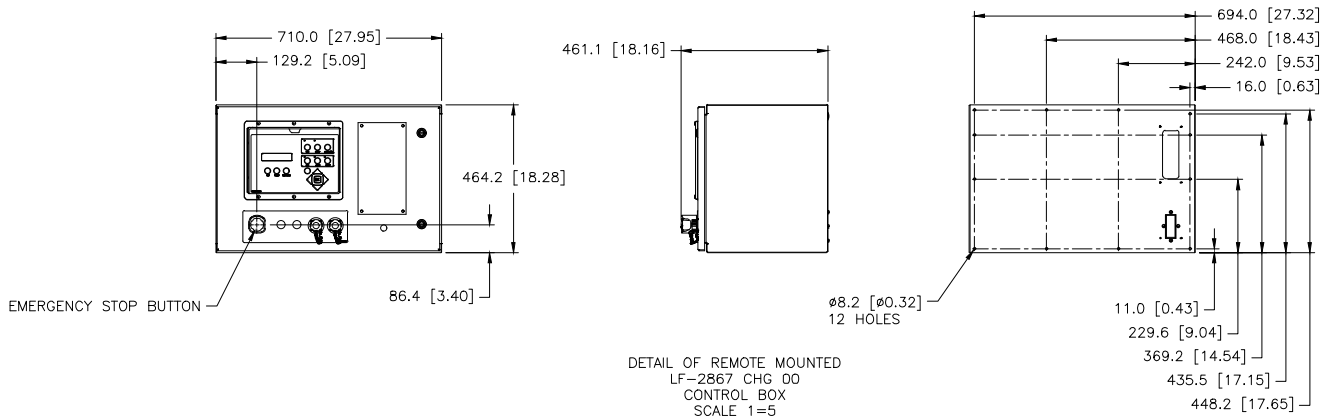

DETAIL OF REMOTE MOUNTED
LF-2867 CHG 00
CONTROL BOX
SCALE 1=5

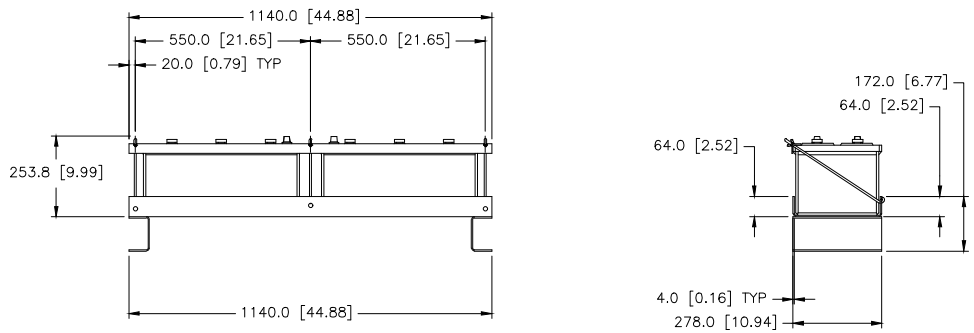

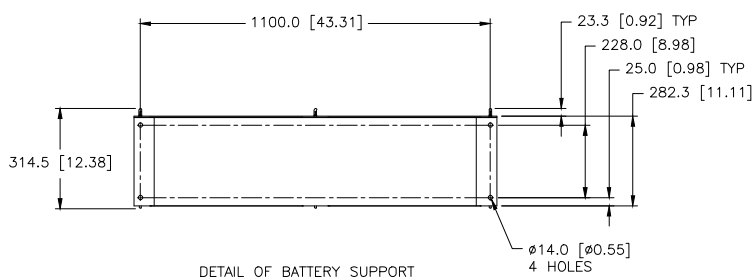

DETAIL OF BATTERY SUPPORT
367-5169 CHG 00
(SHIPPED LOOSE)
SCALE 1=5

1E2966B	IDENT
1E2733	DRAWING-AUTOCAD
1E0198W	BRAND MARKINGS
1E0013G	CONFIDENTIALITY
1E0012A	INTERPRETATION
1E0011	INTPR & TOL

DRN	L. FENG	
CHK	M. J. SWIFT	
APPD	N.P. MOUNTJOY	
DSGN	RECORDS	X

UNLESS OTHERWISE SPECIFIED
DIMENSIONS ARE IN MM [INCH]
DIMENSIONS W/O TOL ARE BASIC
SCALE 1 = 10
SHEET 8 OF 8
THIRD ANGLE PROJECTION
01 22JUN20
CHG DATE

CATERPILLAR INC.

THE INFORMATION CONTAINED IN THE PROPERTY OF CATERPILLAR INC. AND/OR ITS SUBSIDIARIES, AND/OR ANY OTHER CONTRIBUTING, ANY PROPRIETARY, PROPRIETARY, OR PROPRIETARY AND CONFIDENTIAL INFORMATION, IS PROHIBITED. ALL RIGHTS RESERVED.

INSTALLATION-ENGINE
3516 60HZ HV 2250/2500KW

593-3169 | VER - | DWG SIZE | W982 | E