METRIC 595-4928

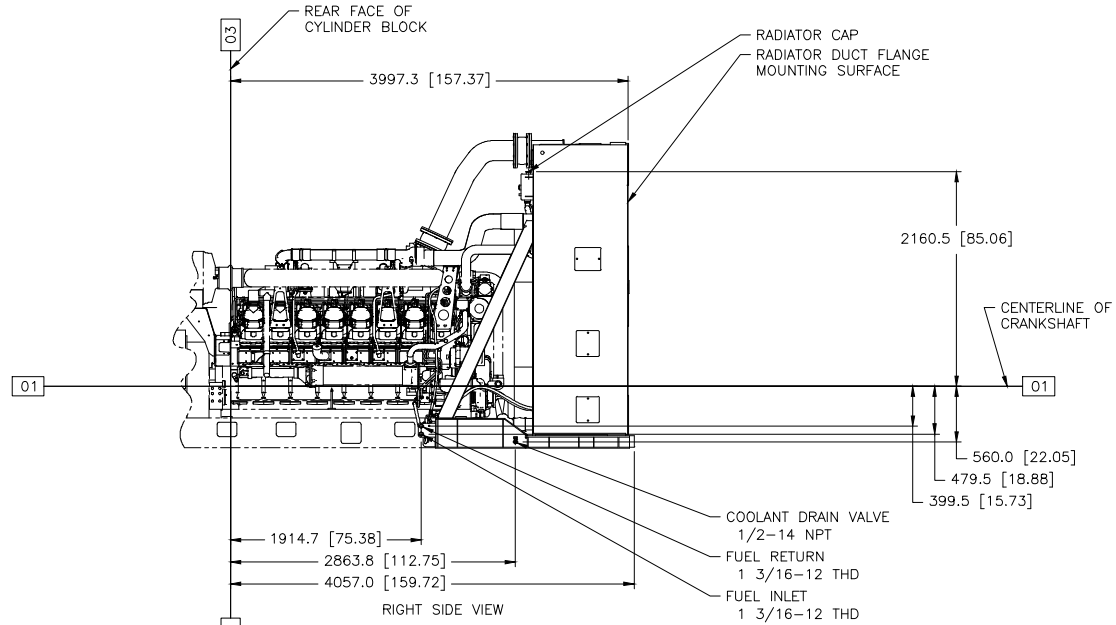

RIGHT SIDE VIEW

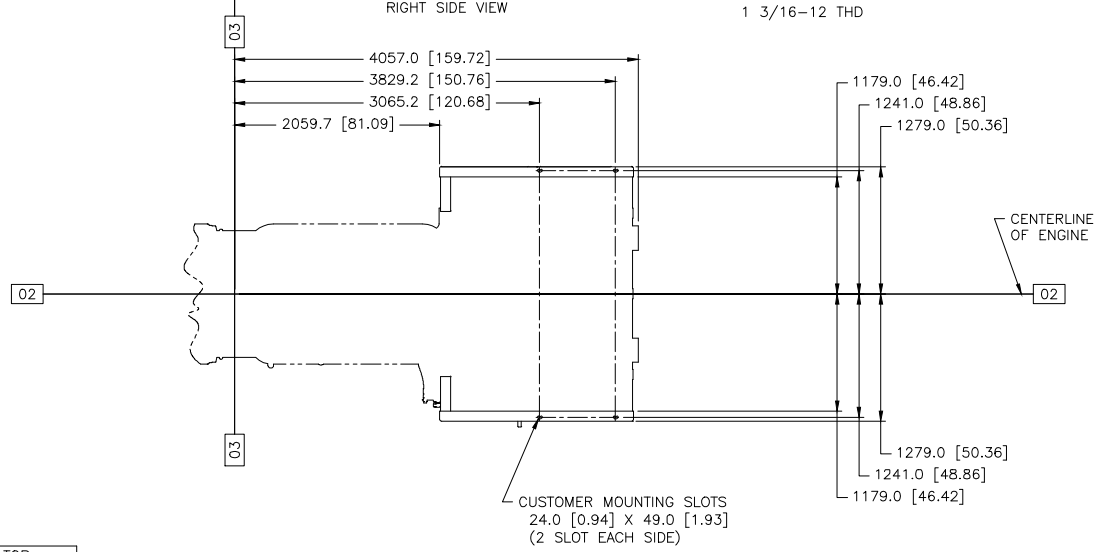

FOOTPRINT VIEW
(DIMENSIONED OUTLINE VIEW FROM ABOVE)
(RIGHT SIDE ORIENTATION)

MODEL	TYPE	RADIATOR
3516	1	LF-3432 CHG 01
		LF-4241 CHG 01
		LF-4242 CHG 01
		LF-3983 CHG 01
		LF-4244 CHG 01
		LF-3984 CHG 01

NOTE: LF-3432 CHG 01 SHOWN

1E2966B	IDENT
1E2733	DRAWING-AUTOCAD
1E0198W	BRAND MARKINGS
1E0013G	CONFIDENTIALITY
1E0012A	INTERPRETATION
1E0011	INTPR & TOL

DRN	J. E. NELSON	
CHK	M.J. SWIFT	
APPD	N.P. MOUNTJOY	
DSGN	RECORDS	X

UNLESS OTHERWISE SPECIFIED DIMENSIONS ARE IN MM [INCH] DIMENSIONS W/O TOL ARE BASIC

SCALE 1 = 16

SHEET 7 OF 26 — THIRD ANGLE PROJECTION — CHG 00 — DATE 11FEB20

CATERPILLAR INC.

THE INFORMATION HEREIN IS THE PROPERTY OF CATERPILLAR INC. AND/OR ITS SUBSIDIARIES. DO NOT COPY OR DISCLOSE THIS DOCUMENT OR USE ANY PART OR WHOLE OR IN PART OR IN PART WITHOUT THE WRITTEN PERMISSION OF CATERPILLAR INC.

INSTALLATION-ATTACHMENT
3516 OPT RADIATORS

595-4928 — SIZE - — DCS 24 — SUB 1 — CONTROL W868 — E