METRIC 596-6813

QTY	CONNECTION	SIZE	SHEETS
1	FUEL INLET	1 3/16-12 THD	2,5
1	EXCESS FUEL RETURN	1 3/16-12 THD	2,5,6
1	EXHAUST	DETAIL	2,4,6,7
2	FUMES DISPOSAL HOSE	ø57.2 [ø2.25] OD	2,4,5
1	OIL DRAIN	1 3/16-12 THD	2,5
2	RADIATOR DRAIN	1/2-14 NPT	2,3,4

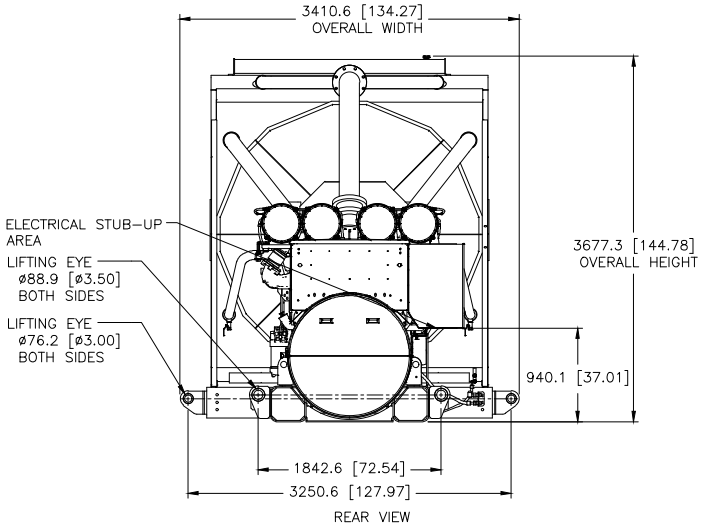

REAR VIEW

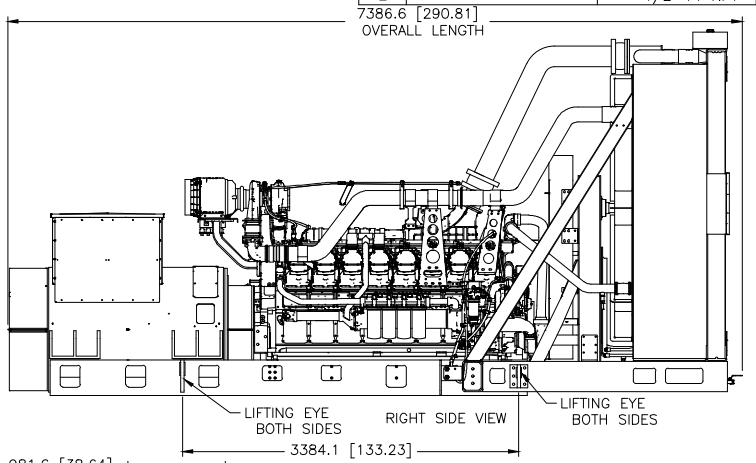

RIGHT SIDE VIEW

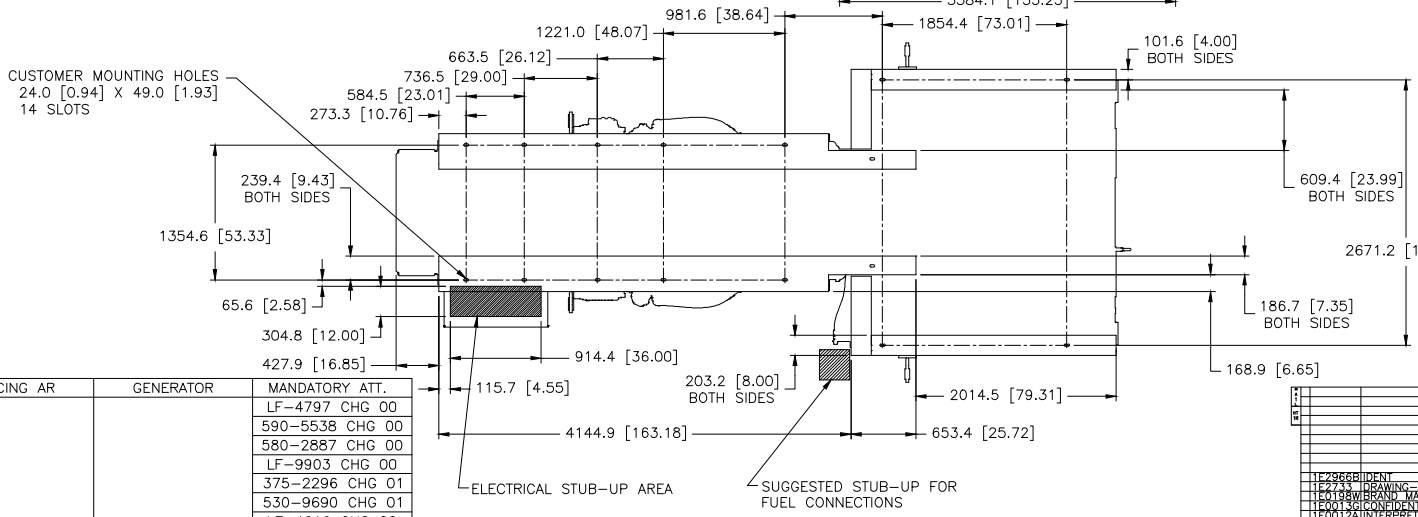

FOOTPRINT
(DIMENSIONED OUTLINE VIEW FROM ABOVE)
(RIGHT SIDE ORIENTATION)

MODEL	TYPE	PRICING AR	GENERATOR	MANDATORY ATT.
3516	–	LF-4609 CHG 00	LF-4633 CHG 00	LF-4797 CHG 00
				590-5538 CHG 00
				580-2887 CHG 00
				LF-9903 CHG 00
				375-2296 CHG 01
				530-9690 CHG 01
				LF-4616 CHG 00
				LF-4612 CHG 00
				LF-5067 CHG 00
				LF-4769 CHG 00
				LF-0783 CHG 00
				LF-4614 CHG 00
				LF-2177 CHG 01
				367-5169 CHG 01
				LF-4772 CHG 00
				LF-0784 CHG 00

PACKAGE LIFTED IN 4 PLACES WITH RADIATOR INSTALLED

PACKAGE SHOWN WITH MORE DETAIL ON FOLLOWING SHEETS

1E2966B IDENT
1E2733 DRAWING-AUTOCAD
1E0198W BRAND MARKINGS
1E0013G CONFIDENTIALITY
1E0012A INTERPRETATION
1E0011 INTPR & TOL

DRN M.J.SWIFT
CHK M.J.SWIFT
APPR N.P. MOUNTJOY
TOL EXP REV PROJ
STATUS RECORDS IX
UNLESS OTHERWISE SPECIFIED DIMENSIONS ARE IN MM [INCH] DIMENSIONS W/O TOL ARE BASIC
SCALE 1 = 16
SHEET 1 OF 8
00 25FEB20
CATERPILLAR INC.
INSTALLATION-ENGINE
3516E 60HZ HV 3000KW
596-6813 W982 E