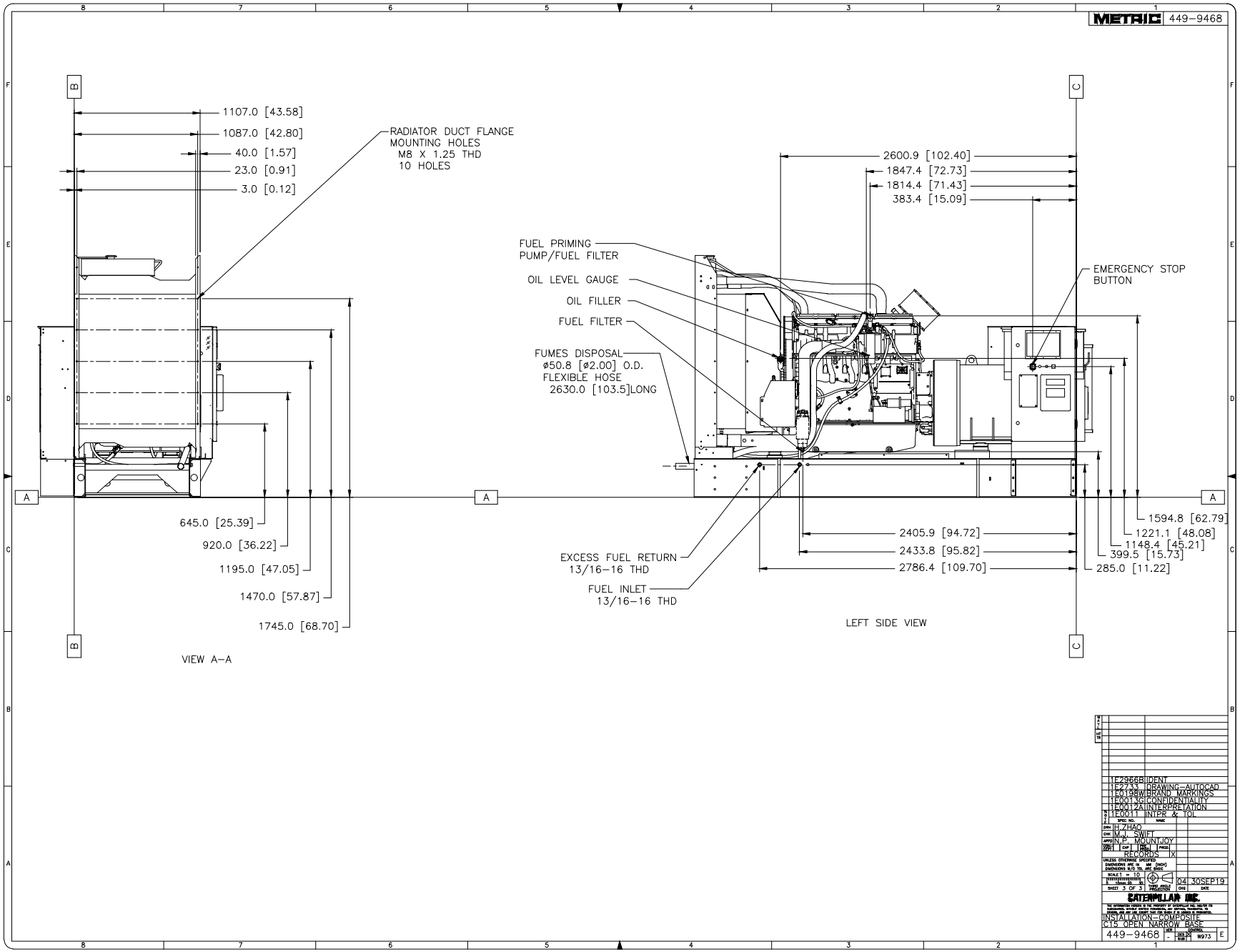
METRIC 449-9468
1107.0 [43.58]
1087.0 [42.80]
40.0 [1.57]
23.0 [0.91]
3.0 [0.12]
RADIATOR DUCT FLANGE MOUNTING HOLES M8 X 1.25 THD 10 HOLES
645.0 [25.39]
920.0 [36.22]
1195.0 [47.05]
1470.0 [57.87]
1745.0 [68.70]
VIEW A-A
2600.9 [102.40]
1847.4 [72.73]
1814.4 [71.43]
383.4 [15.09]
FUEL PRIMING PUMP/FUEL FILTER
OIL LEVEL GAUGE
OIL FILLER
FUEL FILTER
FUMES DISPOSAL ø50.8 [ø2.00] O.D. FLEXIBLE HOSE 2630.0 [103.5]LONG
EMERGENCY STOP BUTTON
EXCESS FUEL RETURN 13/16-16 THD
FUEL INLET 13/16-16 THD
2405.9 [94.72]
2433.8 [95.82]
2786.4 [109.70]
1594.8 [62.79]
1221.1 [48.08]
1148.4 [45.21]
399.5 [15.73]
285.0 [11.22]
LEFT SIDE VIEW
1E2966B IDENT
1E2733 DRAWING-AUTOCAD
1E0198W BRAND MARKINGS
1E0013G CONFIDENTIALITY
1E0012A INTERPRETATION
1E0011 INTPR & TOL
H.ZHAO
M.J. SWIFT
N.P. MOUNTJOY
RECORDS X
SCALE 1 = 10
SHEET 3 OF 3
04 30SEP19
CATERPILLAR INC.
INSTALLATION-COMPOSITE
C15 OPEN NARROW BASE
449-9468
W973
E