METRIC 449-9482

QTY	ENGINE CONNECTIONS	SIZE	SHEET
1	COOLANT DRAIN	ø19.1 [ø0.75] ID	2
1	EXCESS FUEL RETURN	13/16-16 THD	2
1	EXHAUST	SEE DETAIL A	2
1	FUEL INLET	13/16-16 THD	2
1	FUMES DISPOSAL HOSE	ø50.8 [ø2.00] OD	2
1	OIL DRAIN	ø25.4 [ø1.00] ID	2

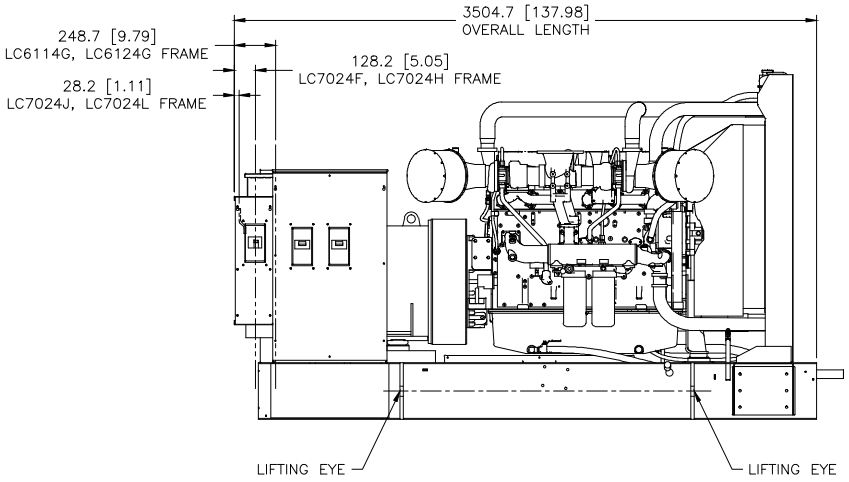

RIGHT SIDE VIEW

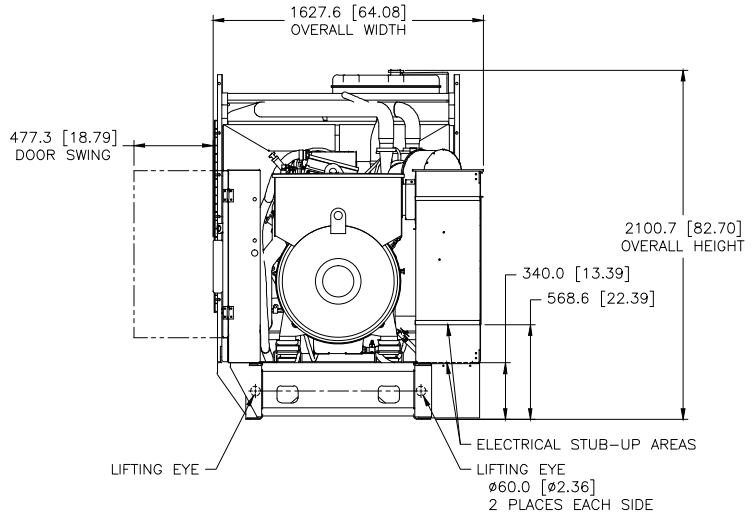

REAR VIEW

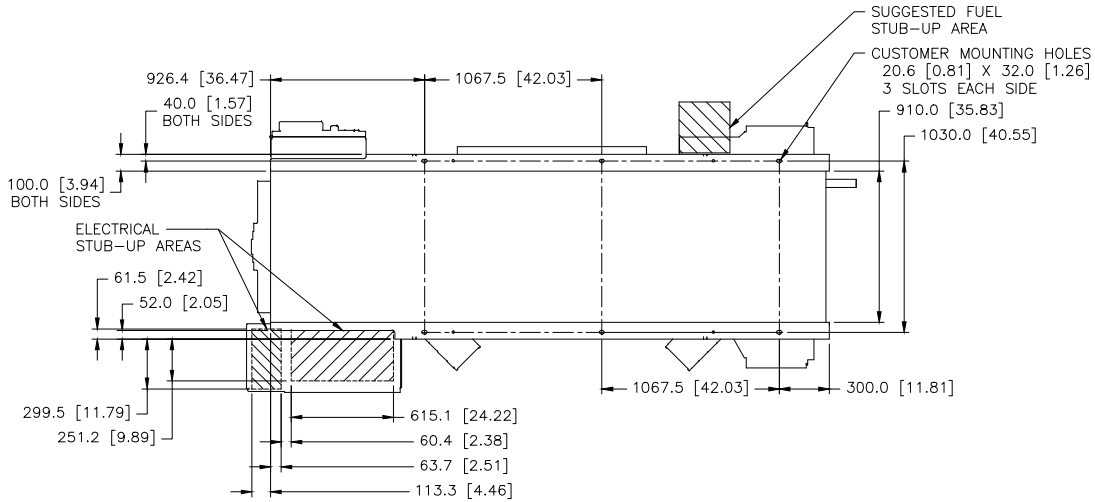

FOOTPRINT
(DIMENSIONED OUTLINE VIEW FROM ABOVE)

PACKAGE LIFTED IN 4 PLACES

PACKAGE SHOWN WITH MORE DETAIL ON SHEET 2

MODEL	TYPE	PRICING AR	BASE
C18	Y	LS-1445 CHG 03	LS-1424 CHG 03

SPEC NO.	NAME
1E2966B	IDENT
1E2713	DRAWING-AUTOCAD
1E0138W	BRAND MARKINGS
1E0013C	CONFIDENTIALITY
1E0122A	INTERPRETATION
1E0011	INTPR & TOL

DRN J.O. SCHAIDLE
CHK M.J. SWIFT
APPD N.P. MOUNTJOY
SCALE 1 = 10
SHEET 1 OF 2
THIRD ANGLE PROJECTION
03 16MAR18
CHG DATE

CATERPILLAR INC.

THE INFORMATION HEREON IS THE PROPERTY OF CATERPILLAR INC. AND ITS SUBSIDIARIES AND MAY NOT BE REPRODUCED, OR DISCLOSED, TRANSFERRED OR USED WITHOUT WRITTEN PERMISSION, OR OTHERWISE MISUSED.

INSTALLATION-COMPOSITE
C18 OPEN NARROW BASE
449-9482
W973
E