METRIC 449-9489

| QTY | ENGINE CONNECTIONS | SIZE | SHEETS |
|---|---|---|---|
| 1 | COOLANT DRAIN | ø19.1 [0.75] ID | 2 |
| 1 | EXHAUST | SEE DETAIL A | 2 |
| 1 | OIL DRAIN | ø25.4 [1.00] ID | 2 |

| QTY | POSSIBLE TANK CONNECTIONS | SIZE | SHEETS |
|---|---|---|---|
| 1 | BASIN TANK EMERGENCY VENT | 5" NPTF THD | 3 |
| 2 | CUSTOMER CONNECTIONS | 2" NPTF THD | 3 |
| 1 | FUEL FILLER | 4" NPTF THD | 3 |
| 1 | MAIN TANK EMERGENCY VENT | 5" NPTF THD | 3 |
| 1 | SPARE PORT | 2" NPT THD | 3 |

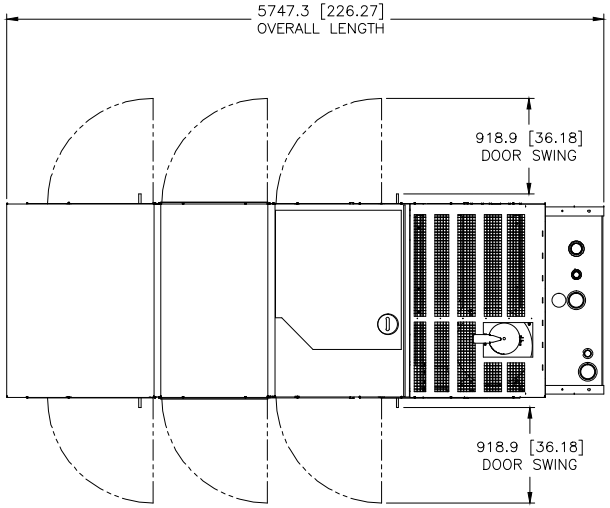


TOP VIEW

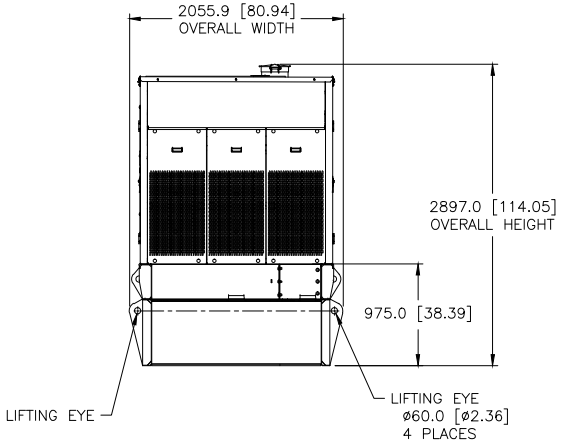


REAR VIEW

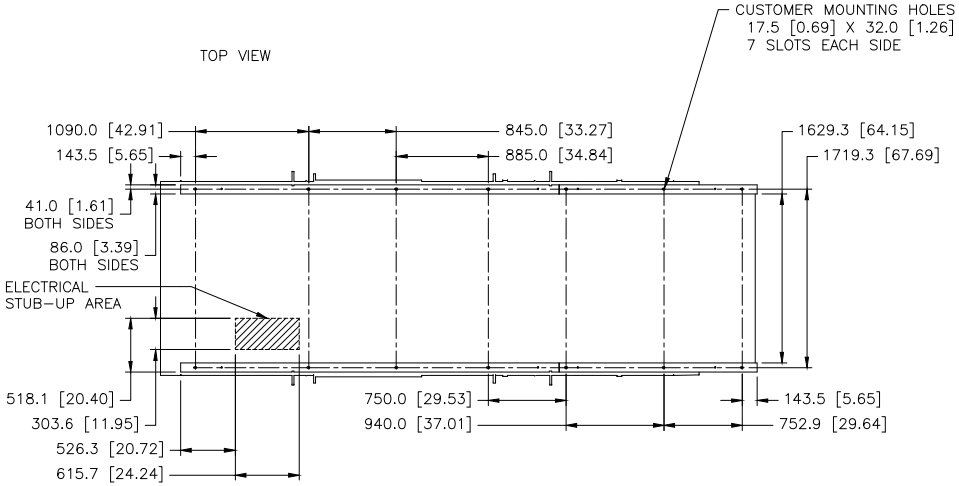


FOOTPRINT
(DIMENSIONED OUTLINE VIEW FROM ABOVE)

| MODEL | TYPE | PRICING AR | ENCLOSURE | TANK |
|---|---|---|---|---|
| C18 | Y | LS-1445 CHG 03 | LS-1574 CHG 00 | LS-1434 CHG 03 |
| | | | LS-1576 CHG 00 | |
| | | | LS-0256 CHG 00 | |
| | | | LS-0258 CHG 00 | |
| | | | LS-1457 CHG 00 | |
| | | | LS-1459 CHG 00 | |
| | | | LS-1368 CHG 00 | |
| | | | LS-1556 CHG 00 | |
| | | | LS-1558 CHG 00 | |
| | | | LS-1560 CHG 00 | |

PACKAGE LIFTED IN 4 PLACES

PACKAGE SHOWN WITH MORE DETAIL ON SHEETS 2 & 3

| REV | SPEC NO. | NAME |
|---|---|---|
| | 1E2966B | IDENT |
| | 1E2733 | DRAWING-AUTOCAD |
| | 1E0138W | BRAND MARKINGS |
| | 1E0013C | CONFIDENTIALITY |
| | 1E0172A | INTERPRETATION |
| | 1E0011 | INTPR & TOL |

DRN M.J. SWIFT
CHK M.J. SWIFT
APPD N.P. MOUNTJOY
RECORDS X

UNLESS OTHERWISE SPECIFIED
DIMENSIONS ARE IN MM [INCH]
DIMENSIONS W/O TOL ARE BASIC

SCALE 1 = 18
SHEET 1 OF 3
THIRD ANGLE PROJECTION
04-2APR2018
DATE

CATERPILLAR INC.

THE INFORMATION HEREON IS THE PROPERTY OF CATERPILLAR INC. AND ITS SUBSIDIARIES AND MAY NOT BE REPRODUCED, OR DISPLAYED, TRANSMITTED OR DISCLOSED WITHOUT WRITTEN PERMISSION. ALL RIGHTS ARE RESERVED.

INSTALLATION-COMPOSITE
C18 ENCL SUB TANK 1000GAL

449-9489 LVLR - DES 24 SUB W973 E