METRIC 449-9490

QTY	ENGINE CONNECTIONS	SIZE	SHEETS
1	COOLANT DRAIN	ø19.1 [0.75] ID	2
1	OIL DRAIN	ø25.4 [1.00] ID	2

QTY	POSSIBLE TANK CONNECTIONS	SIZE	SHEETS
1	BASIN TANK EMERGENCY VENT	6" NPTF THD	3
2	CUSTOMER CONNECTIONS	2" NPTF THD	3
1	FUEL FILLER	4" NPTF THD	3
1	MAIN TANK EMERGENCY VENT	6" NPTF THD	3
3	SPARE PORT	2" NPT THD	3
1	SPARE PORT	4" NPT THD	3

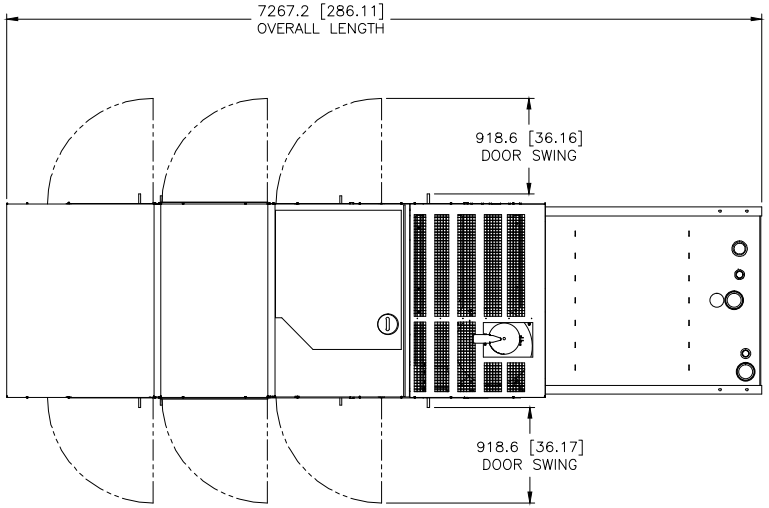

TOP VIEW

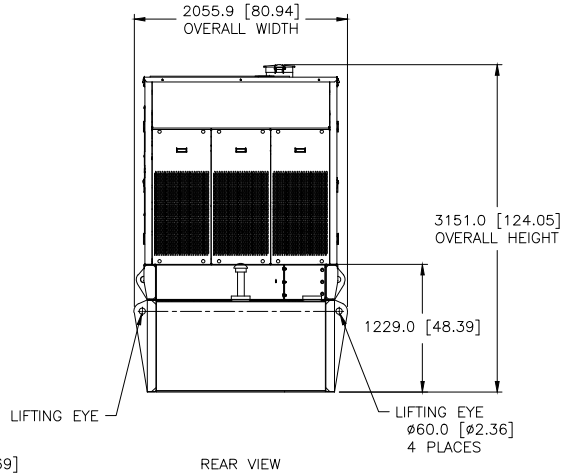

REAR VIEW

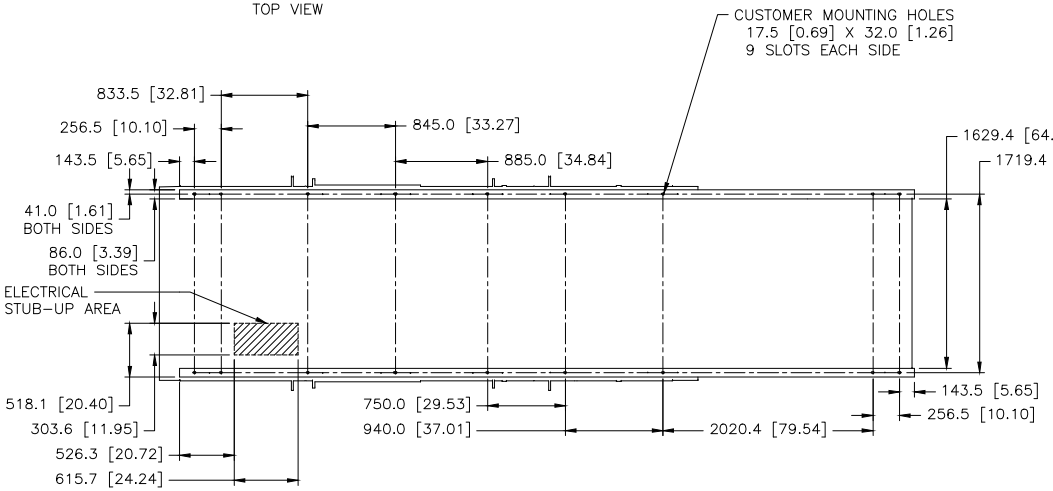

FOOTPRINT
(DIMENSIONED OUTLINE VIEW FROM ABOVE)

MODEL	TYPE	PRICING AR	ENCLOSURE	TANK
C18	Y	LS-1445 CHG 03	LS-1574 CHG 00	LS-1436 CHG 03
			LS-1576 CHG 00	
			LS-0256 CHG 00	
			LS-0258 CHG 00	
			LS-1457 CHG 00	
			LS-1459 CHG 00	
			LS-1368 CHG 00	
			LS-1556 CHG 00	
			LS-1558 CHG 00	
			LS-1560 CHG 00	

PACKAGE LIFTED IN 4 PLACES

PACKAGE SHOWN WITH MORE DETAIL ON SHEETS 2 & 3

1E2966B	IDENT
1E2733	DRAWING-AUTOCAD
1E0198W	BRAND MARKINGS
1E0013G	CONFIDENTIALITY
1E0012A	INTERPRETATION
1E0011	INTPR & TOL

DRN M.J. SWIFT
CHK M.J. SWIFT
APPD N.P. MOUNTJOY
CONT EXP | EXP | PROD | PROD
RECORDS X
UNLESS OTHERWISE SPECIFIED DIMENSIONS ARE IN MM [INCH] DIMENSIONS W/O TOL ARE BASIC
SCALE 1 = 16
SHEET 1 OF 3
THIRD ANGLE PROJECTION
04 2APR2018
CHG DATE

CATERPILLAR INC.

INSTALLATION-COMPOSITE
C18 ENCL SUB TANK 2200GAL

449-9490 | DES DO | SUB | W973 | E