METRIC 449-9490

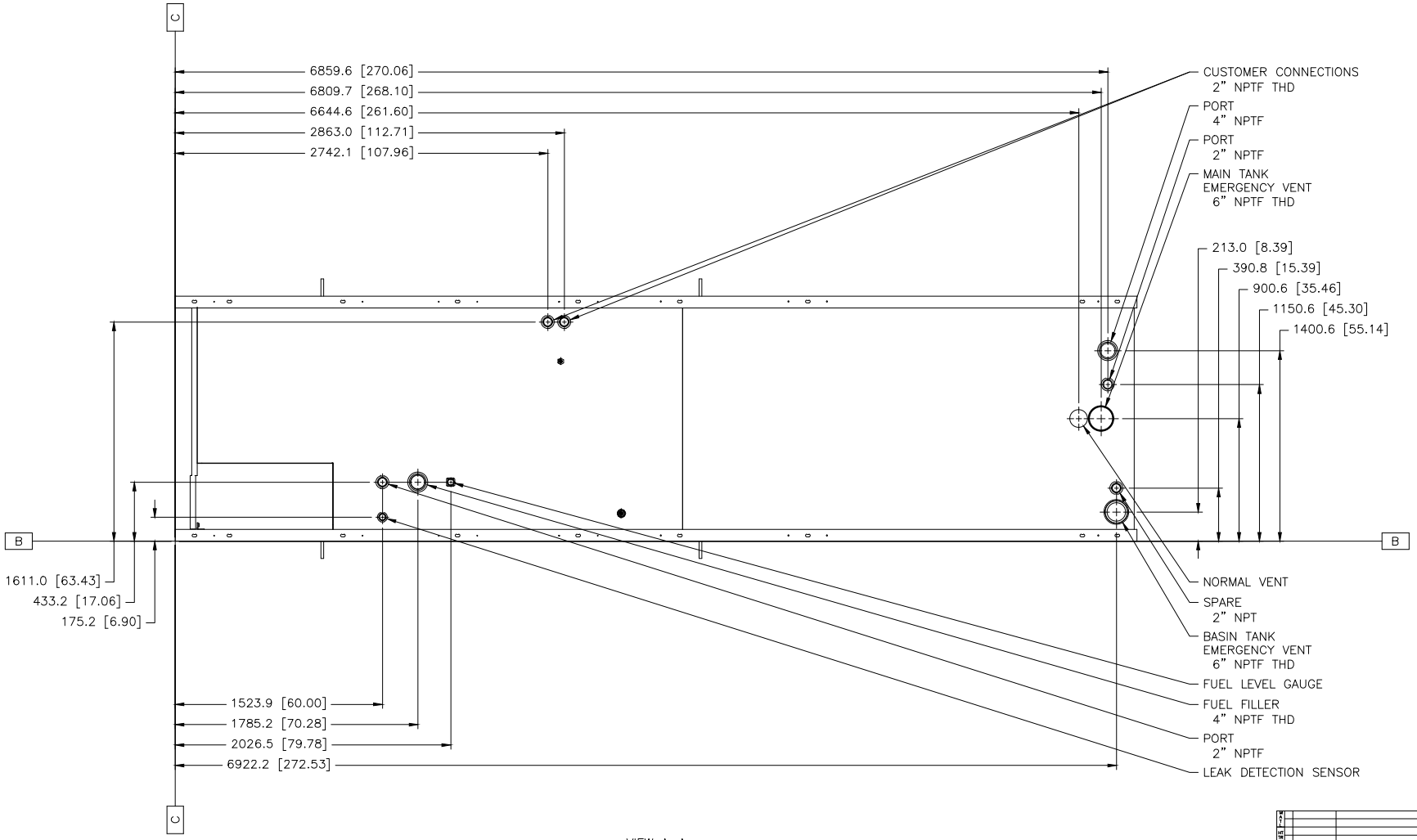

VIEW A–A

REV	SPEC NO.	NAME
	1E2966B	IDENT
	1E2733	DRAWING–AUTOCAD
	1E0138W	BRAND MARKINGS
	1E0013C	CONFIDENTIALITY
	1E0122A	INTERPRETATION
	1E0011	INTPR & TOL

DRN M.J. SWIFT
CHK M.J. SWIFT
APPD N.P. MOUNTJOY
ENG/DSN | EXP | DES | PROD
RECORDS X

UNLESS OTHERWISE SPECIFIED:
DIMENSIONS ARE IN MM [INCH]
DIMENSIONS W/O TOL ARE BASIC

SCALE 1 = 10
DIMENSIONS IN MM [INCH]
SHEET 3 OF 3
THIRD ANGLE PROJECTION
04 02APR18
CHG DATE

CATERPILLAR INC.

THE INFORMATION HEREON IS THE PROPERTY OF CATERPILLAR INC. AND/OR ITS SUBSIDIARIES AND MAY NOT BE REPRODUCED, OR COPIED, TRANSFERRED TO ANYONE OUTSIDE THE COMPANY WITHOUT WRITTEN AUTHORIZATION.

INSTALLATION–COMPOSITE
C18 ENCL SUB TANK 2200GAL

449–9490 LVR - DES SUB W973 E