METRIC 455–7108

QTY	ENGINE CONNECTIONS	SIZE	SHEET
1	COOLANT DRAIN	ø19.1 [ø0.75] ID	2
1	EXCESS FUEL RETURN	13/16–16 THD	2
1	EXHAUST	ø127.0 [ø5.0] OD	2
1	FUEL INLET	13/16–16 THD	2
1	FUMES DISPOSAL TUBE	ø52.5 [ø2.06] OD	2
1	OIL DRAIN	3/4–16 THD	2

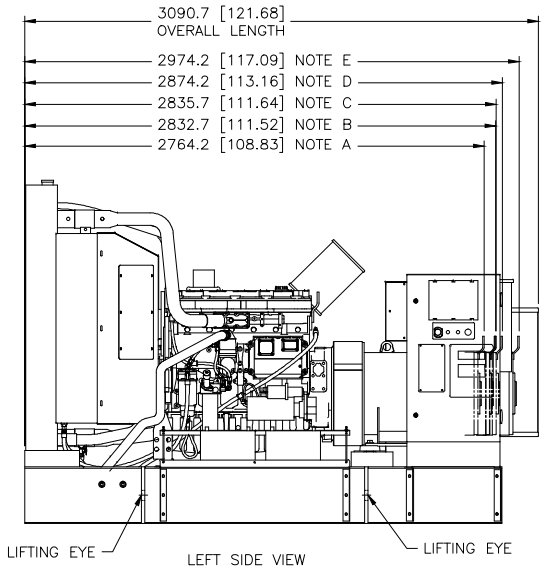

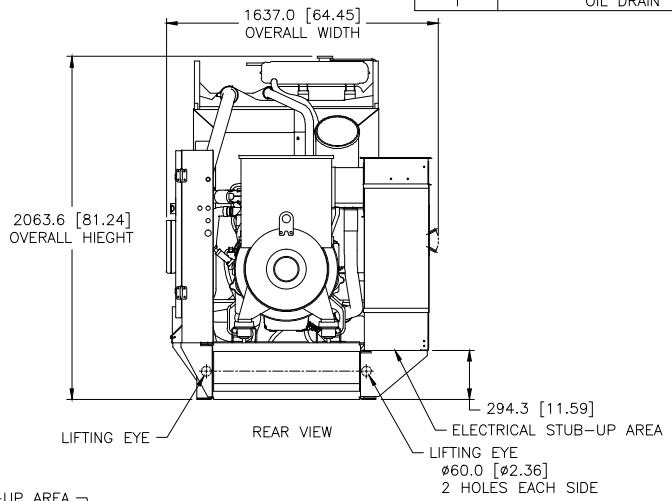

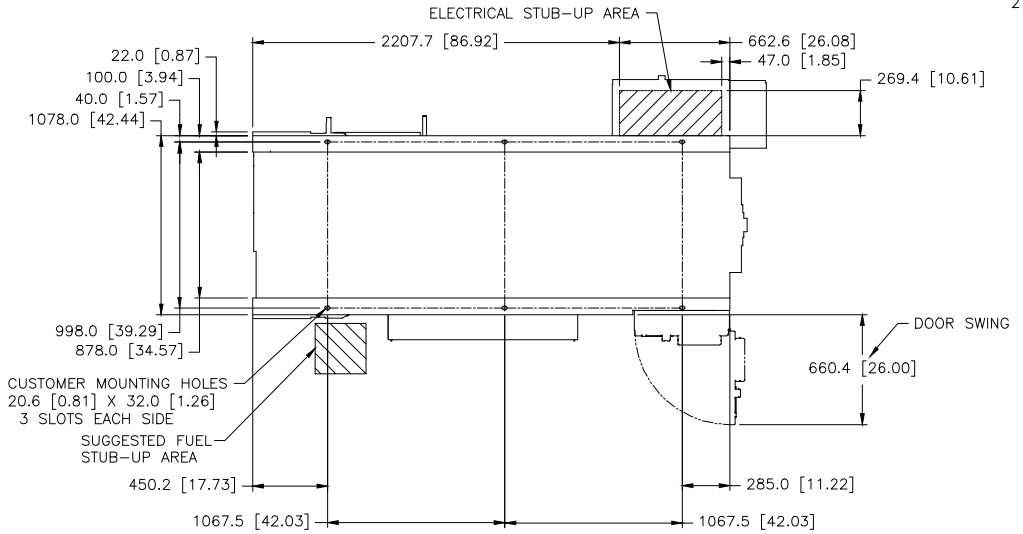

FOOTPRINT
(DIMENSIONED OUTLINE VIEW FROM ABOVE)

NOTE A : DIMENSION FOR LC5014F FRAME
NOTE B : DIMENSION FOR LC6114B & LC6124B FRAME
NOTE C : DIMENSION FOR LC6124B & LC6114B FRAME
NOTE D : DIMENSION FOR LC5014H, LC5014J, LC5024H, LC5024J & 5024L FRAME
NOTE E : DIMENSION FOR LC5014L & LC5024L FRAME

PACKAGE LIFTED IN 4 PLACES

PACKAGE SHOWN WITH MORE DETAIL ON SHEETS 2 & 3

MODEL	TYPE	ENGINE AR	BASE AR
C9	Y	LS–0249 CHG 01	LS–1842 CHG 01

REV	SPEC NO.	NAME
	1E2966B	IDENT
	1E2733	DRAWING–AUTOCAD
	1E0138W	BRAND MARKINGS
	1E0013C	CONFIDENTIALITY
	1E0122A	INTERPRETATION
	1E0011	INTPR & TOL

DRN B.R.VILLENA
CHK B.R.VILLENA
APPD N.P.MOUNTJOY
SUPT | EXP | MFG | PROD
RECORDS X

UNLESS OTHERWISE SPECIFIED
DIMENSIONS ARE IN MM [INCH]
DIMENSIONS W/O TOL ARE BASIC

SCALE 1 = 10
DIMENSIONS IN MM [IN]
SHEET 1 OF 3
THIRD ANGLE PROJECTION
CHG 0.3 DATE 05FEB19

CATERPILLAR INC.

THE INFORMATION HEREON IS THE PROPERTY OF CATERPILLAR INC. AND/OR ITS SUBSIDIARIES AND MAY CONTAIN PROPRIETARY, OR CAPTIVE, INFORMATION OR MATERIAL. ANY REPRODUCTION OR DISCLOSURE WITHOUT WRITTEN PERMISSION IS PROHIBITED.

INSTALLATION–COMPOSITE
C9 OPEN NARROW SKID

455–7108 | USR – | DWG SIZE A | SUB | CONTROL W973 | E