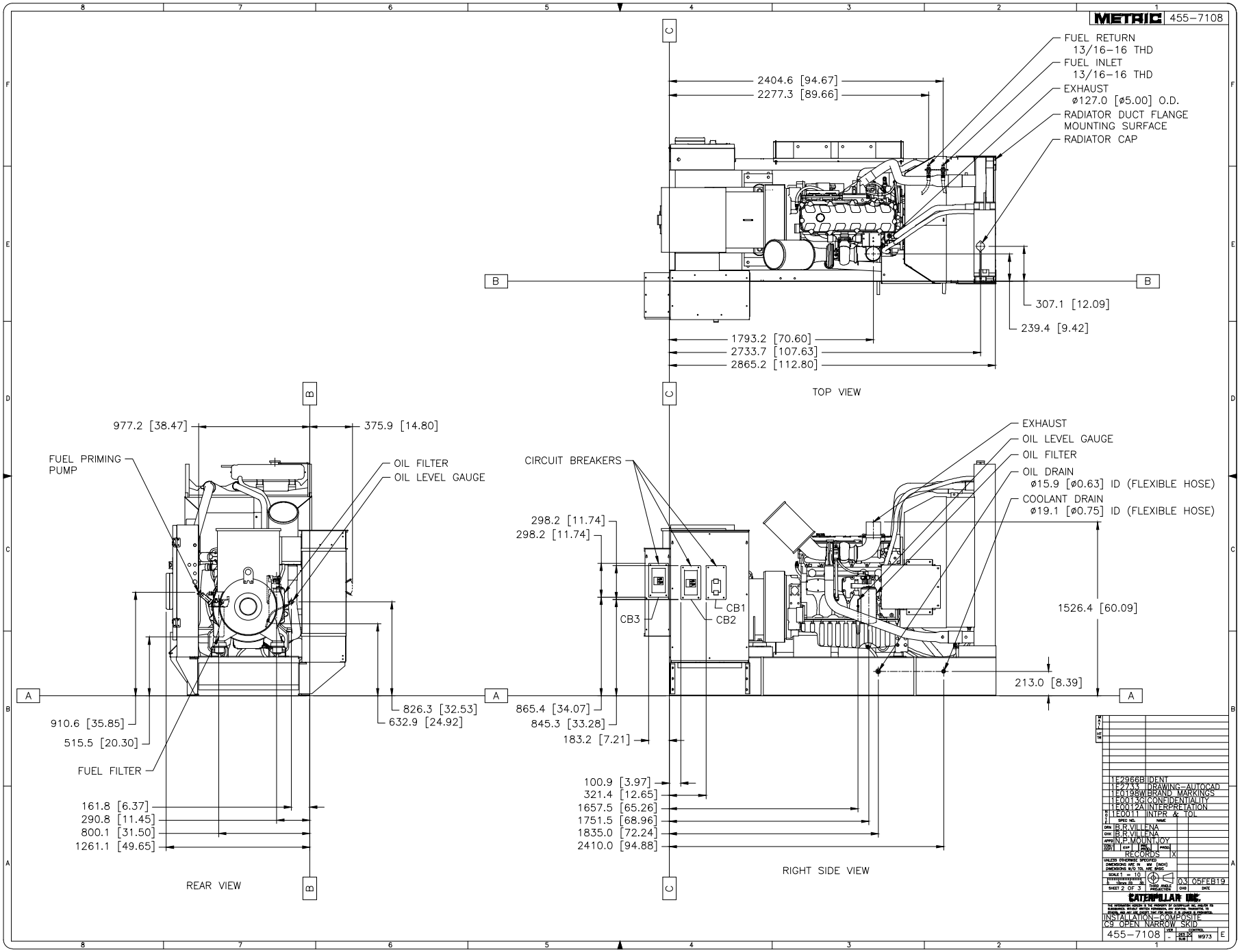
METRIC 455-7108
FUEL RETURN 13/16-16 THD
FUEL INLET 13/16-16 THD
EXHAUST ø127.0 [ø5.00] O.D.
RADIATOR DUCT FLANGE MOUNTING SURFACE
RADIATOR CAP
2404.6 [94.67]
2277.3 [89.66]
307.1 [12.09]
239.4 [9.42]
1793.2 [70.60]
2733.7 [107.63]
2865.2 [112.80]
TOP VIEW
977.2 [38.47]
375.9 [14.80]
FUEL PRIMING PUMP
OIL FILTER
OIL LEVEL GAUGE
910.6 [35.85]
515.5 [20.30]
FUEL FILTER
826.3 [32.53]
632.9 [24.92]
161.8 [6.37]
290.8 [11.45]
800.1 [31.50]
1261.1 [49.65]
REAR VIEW
CIRCUIT BREAKERS
EXHAUST
OIL LEVEL GAUGE
OIL FILTER
OIL DRAIN ø15.9 [ø0.63] ID (FLEXIBLE HOSE)
COOLANT DRAIN ø19.1 [ø0.75] ID (FLEXIBLE HOSE)
298.2 [11.74]
298.2 [11.74]
CB1
CB2
CB3
1526.4 [60.09]
213.0 [8.39]
865.4 [34.07]
845.3 [33.28]
183.2 [7.21]
100.9 [3.97]
321.4 [12.65]
1657.5 [65.26]
1751.5 [68.96]
1835.0 [72.24]
2410.0 [94.88]
RIGHT SIDE VIEW
1E2966B IDENT
1E2733 DRAWING-AUTOCAD
1E0198W BRAND MARKINGS
1E0013G CONFIDENTIALITY
1E0012A INTERPRETATION
1E0011 INTPR & TOL
DRN B.R.VILLENA
CHK B.R.VILLENA
APPD N.P.MOUNTJOY
RECORDS X
SCALE 1 = 10
SHEET 2 OF 3
THIRD ANGLE PROJECTION
03 05FEB19
CATERPILLAR INC.
INSTALLATION-COMPOSITE
C9 OPEN NARROW SKID
455-7108
W973
E