METRIC 455-7110

QTY	ENGINE CONNECTIONS	SIZE	SHEET
1	COOLANT DRAIN	ø19.1 [0.75] ID	2
1	EXCESS FUEL RETURN	13/16-16 THD	2
1	EXHAUST	ø203.2 [8.00] OD	2
1	FUEL INLET	13/16-16 THD	2
1	OIL DRAIN	ø15.9 [0.63] ID	2

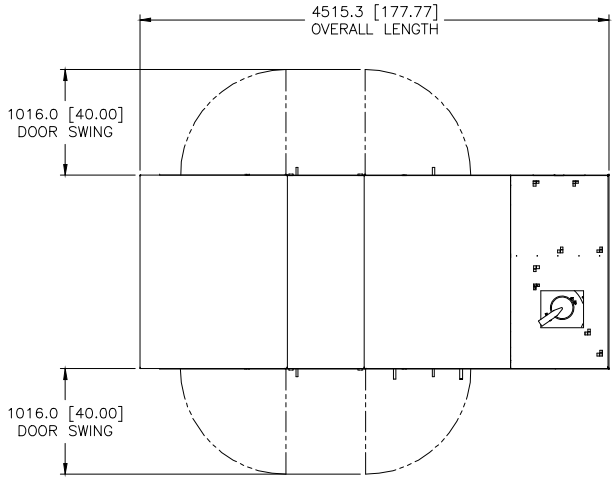

TOP VIEW

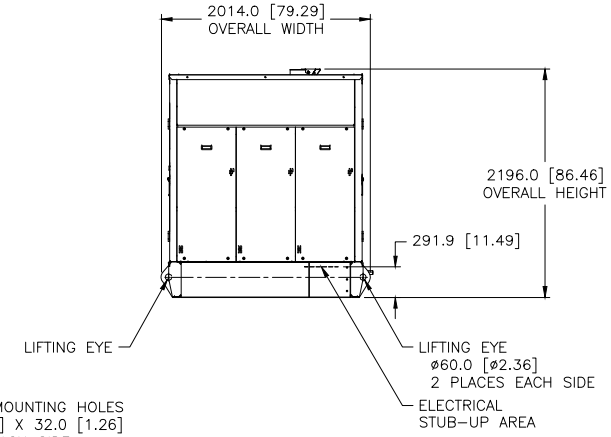

REAR VIEW

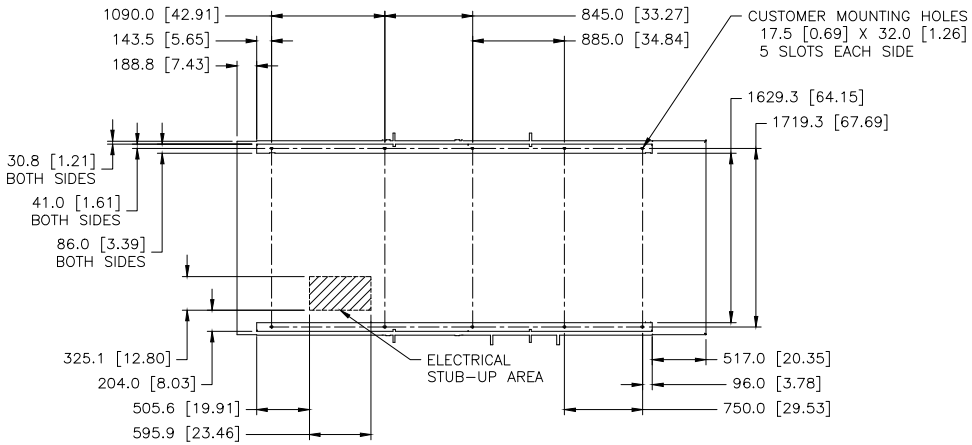

FOOTPRINT
(DIMENSIONED OUTLINE VIEW FROM ABOVE)

MODEL	TYPE	PRICING AR	TANK	ENCLOSURE
C9	Y	LS-0249 CHG 00	LS-1843 CHG 00	LS-1838 CHG 00
				LS-1839 CHG 00
				LS-1840 CHG 00
				LS-1841 CHG 00
				LS-1869 CHG 00

NOTE: ENCLOSURE ARRANGEMENTS
LS-1839 AND LS-1841 COME WITH WINDOW

PACKAGE LIFTED IN 4 PLACES

PACKAGE SHOWN WITH MORE DETAIL ON SHEET 2

REV	SPEC NO.	NAME
	1E2966B	IDENT
	1E2733	DRAWING-AUTOCAD
	1E0198W	BRAND MARKINGS
	1E0013C	CONFIDENTIALITY
	1E0012A	INTERPRETATION
	1E0011	INTPR & TOL

DRN J.O. SCHAIDLE
CHK M.J. SWIFT
APPD N.P. MOUNTJOY
ENG SUPV
PROD SUPV
OTHER RECORDS X

UNLESS OTHERWISE SPECIFIED
DIMENSIONS ARE IN MM [INCH]
DIMENSIONS W/O TOL ARE BASIC

SCALE 1 = 16
DIMENSIONS IN MM [INCH]
SHEET 1 OF 2
THIRD ANGLE PROJECTION
CHG 05 DATE 29JUN18

CATERPILLAR INC.

THE INFORMATION HEREON IS THE PROPERTY OF CATERPILLAR INC. AND ITS SUBSIDIARIES AND MAY NOT BE REPRODUCED, OR DISCLOSED, TRANSFERRED OR DISPOSED OF WITHOUT WRITTEN PERMISSION, OR EXPORTED, TRANSFERRED OR DISPOSED OF IN VIOLATION OF ANY APPLICABLE LAWS OR REGULATIONS.

INSTALLATION-COMPOSITE
C9 SA ENCLOSURE

455-7110 LTR - DES 24 SUB CONTROL W973 E