METRIC 485-5374

QTY	ENGINE CONNECTIONS	SIZE	SHEET
1	COOLANT DRAIN	ø19.1 [ø0.75] ID	2
1	EXCESS FUEL RETURN	13/16-16 THD	2
1	EXHAUST	ø127.0 [ø5.0] OD	2
1	FUEL INLET	13/16-16 THD	2
1	FUMES DISPOSAL TUBE	ø52.5 [ø2.06] OD	2
1	OIL DRAIN	3/4-16 THD	2

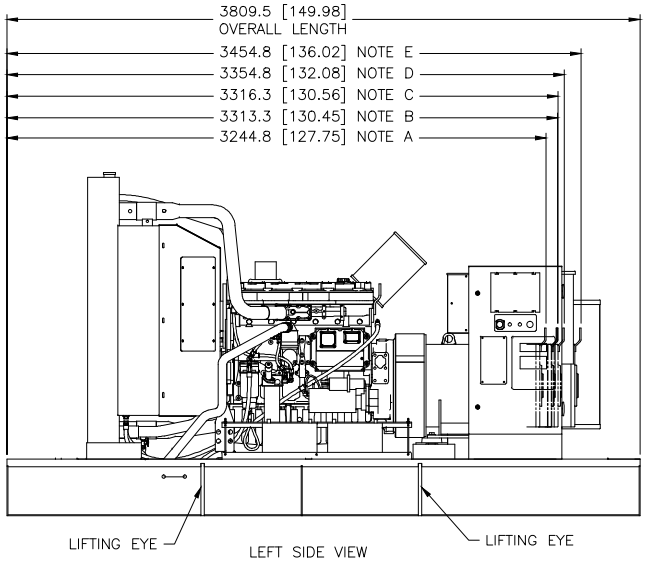

LEFT SIDE VIEW

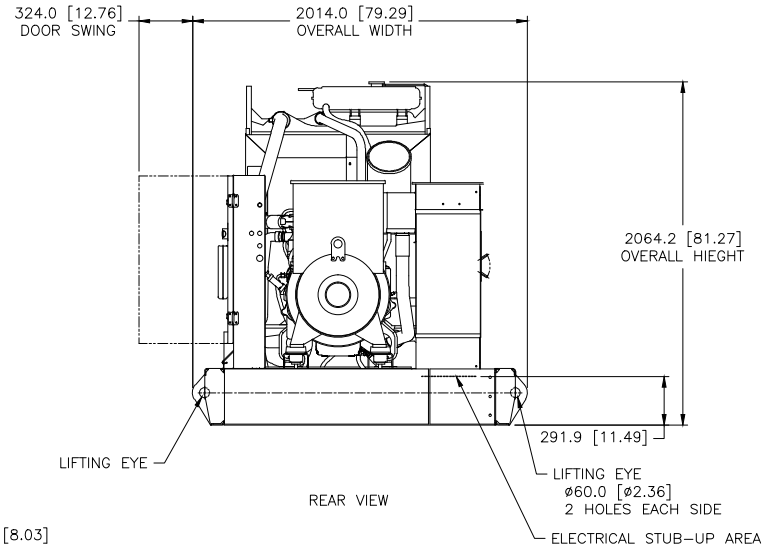

REAR VIEW

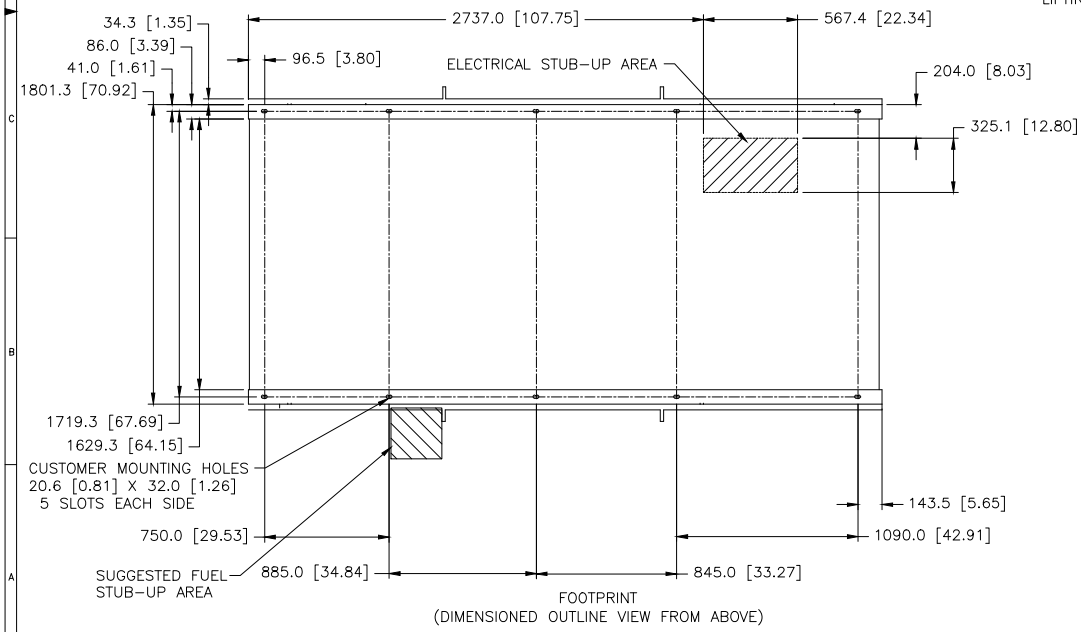

FOOTPRINT
(DIMENSIONED OUTLINE VIEW FROM ABOVE)

NOTE A : DIMENSION FOR LC5014F FRAME
NOTE B : DIMENSION FOR LC6114B & LC6124B FRAME
NOTE C : DIMENSION FOR LC6124B & LC6114B FRAME
NOTE D : DIMENSION FOR LC5014H, LC5014J, LC5024H, LC5024J & 5024L FRAME
NOTE E : DIMENSION FOR LC5014L & LC5024L FRAME

PACKAGE LIFTED IN 4 PLACES

PACKAGE SHOWN WITH MORE DETAIL ON SHEETS 2 & 3

MODEL	TYPE	ENGINE AR	BASE AR
C9	Y	LS-0249 CHG 01	LS-1843 CHG 00

REV	SPEC NO.	NAME
	1E2966B	IDENT
	1E2713	DRAWING-AUTOCAD
	1E0138W	BRAND MARKINGS
	1E0013Q	CONFIDENTIALITY
	1E0122A	INTERPRETATION
	1E0011	INTPR & TOL

DRN M.J. SWIFT
CHK M.J. SWIFT
APPD N.P. MOUNTJOY
SUPT
RECORDS X

UNLESS OTHERWISE SPECIFIED
DIMENSIONS ARE IN MM [INCH]
DIMENSIONS W/O TOL ARE BASIC

SCALE 1 = 10
DIMENSIONS IN MM
1 [.10mm/.25 IN]
SHEET 1 OF 3
THIRD ANGLE PROJECTION
01 13JUL18
CHG DATE

CATERPILLAR INC.

THE INFORMATION HEREON IS THE PROPERTY OF CATERPILLAR INC. AND ITS SUBSIDIARIES AND MAY NOT BE REPRODUCED, OR DISPLAYED, TRANSMITTED OR DISCLOSED WITHOUT WRITTEN PERMISSION, AND IS PROVIDED ON A CONFIDENTIAL BASIS.

INSTALLATION-COMPOSITE
C9 OPEN WIDE BASE
485-5374
LVR - DES 24 SUB
CONTROL W973
E