METRIC 509-6520

QTY	ENGINE CONNECTIONS	SIZE	SHEET
1	COOLANT DRAIN	ø19.1 [ø0.75] ID	2
1	EXCESS FUEL RETURN	13/16-16 THD	3
1	EXHAUST	ø154.5 [ø6.08]	2
1	FUEL INLET	13/16-16 THD	3
1	FUMES DISPOSAL HOSE	ø32.0 [ø1.26] ID	2
1	OIL DRAIN	ø25.4 [ø1.00] ID	2

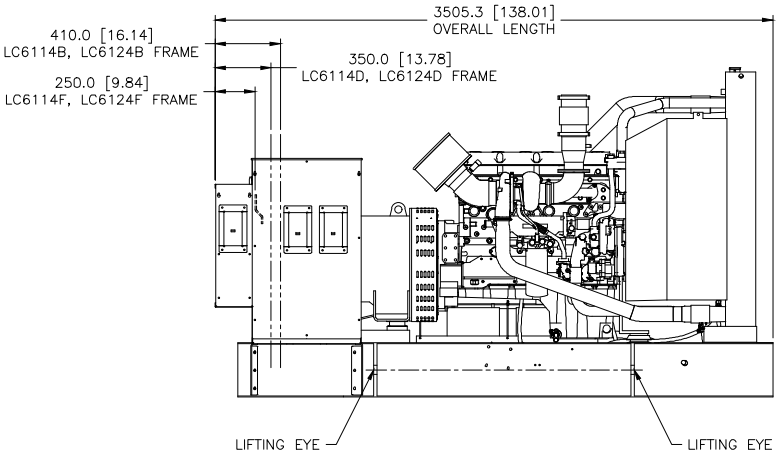

RIGHT SIDE VIEW

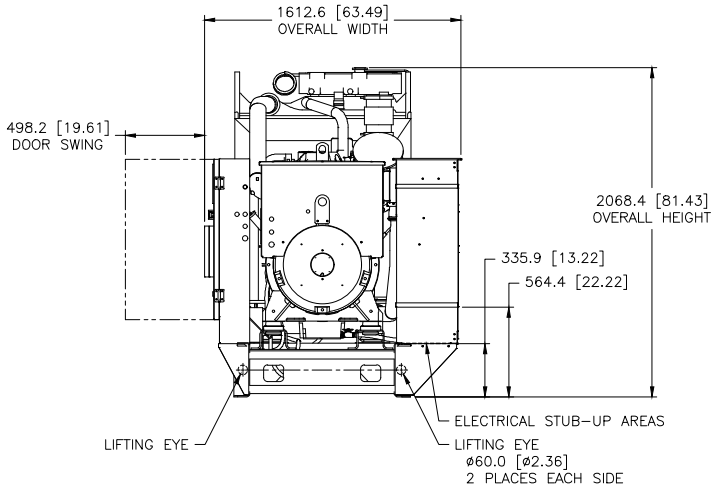

REAR VIEW

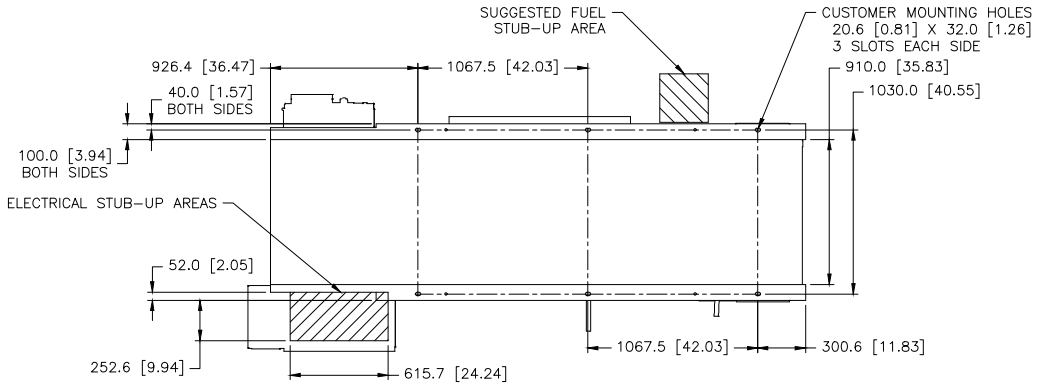

FOOTPRINT
(DIMENSIONED OUTLINE VIEW FROM ABOVE)

PACKAGE LIFTED IN 4 PLACES

PACKAGE SHOWN WITH MORE DETAIL ON SHEET 2

MODEL	TYPE	PRICING AR	BASE
C13	Y	LS-1503 CHG 02	LS-1521 CHG 00
		LS-1543 CHG 02	

1E2966B	IDENT
1E2733	DRAWING-AUTOCAD
1E0198W	BRAND MARKINGS
1E0013G	CONFIDENTIALITY
1E0012A	INTERPRETATION
1E0011	INTPR & TOL

DRN H.ZHAO
CHK M.J. SWIFT
APPD N.P. MOUNTJOY
RECORDS X
SCALE 1 = 10
SHEET 1 OF 3
04 23OCT19
CATERPILLAR INC.
INSTALLATION-COMPOSITE
C13 OPEN NARROW BASE
509-6520
W973 E