METRIC 509–6522

QTY	ENGINE CONNECTIONS	SIZE	SHEETS
1	COOLANT DRAIN	ø19.1 [0.75] ID	2
1	EXHAUST	ø154.5 [ø6.08]	2
1	OIL DRAIN	ø19.1 [0.75] ID	2

QTY	POSSIBLE TANK CONNECTIONS	SIZE	SHEETS
1	BASIN TANK EMERGENCY VENT	5" NPT THD	3
2	CUSTOMER CONNECTIONS	2" NPTF THD	3
1	FUEL FILLER	4" NPT THD	3
1	MAIN TANK EMERGENCY VENT	5" NPT THD	3
1	SPARE PORT	2" NPT	3

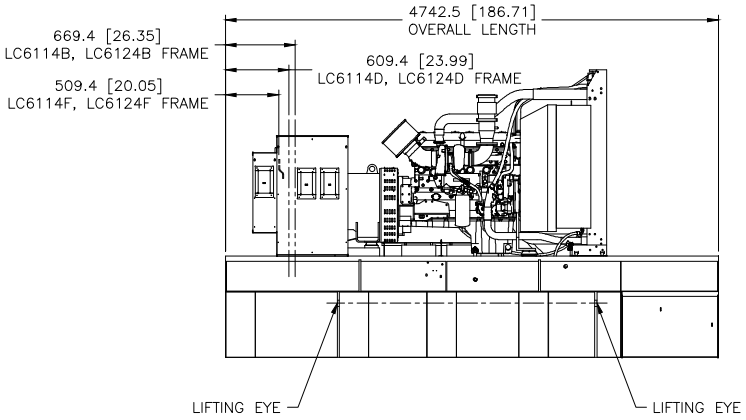

RIGHT SIDE VIEW

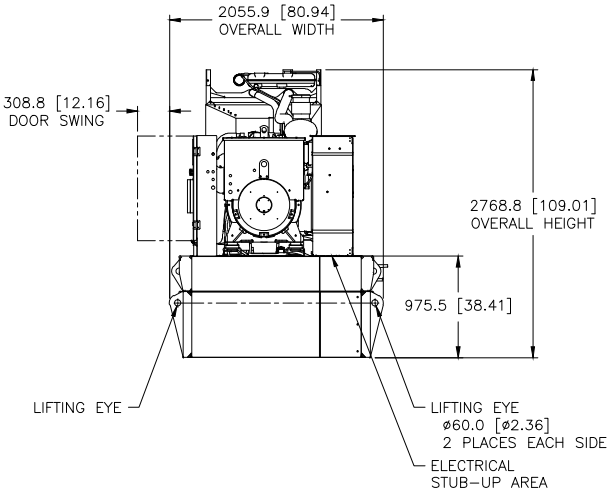

REAR VIEW

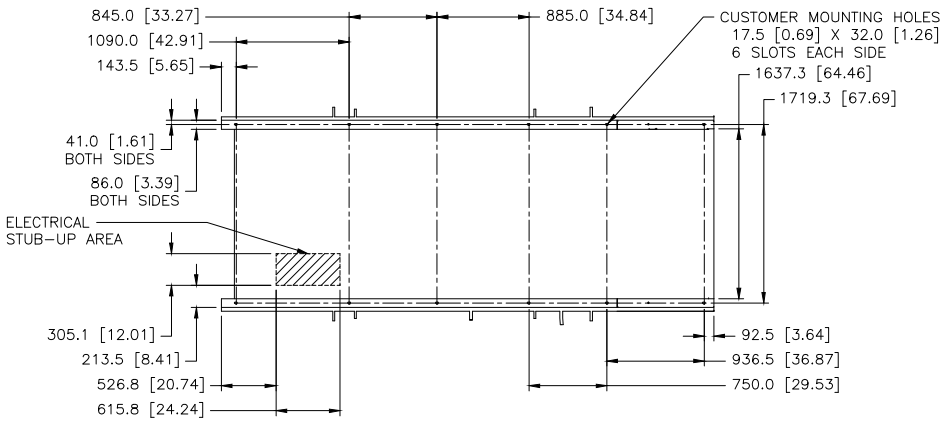

FOOTPRINT
(DIMENSIONED OUTLINE VIEW FROM ABOVE)

PACKAGE LIFTED IN 4 PLACES

PACKAGE SHOWN WITH MORE DETAIL ON SHEETS 2 & 3

MODEL	TYPE	PRICING AR	FUEL TANK
C13	Y	LS–1503 CHG 00	LS–1526 CHG 00
		LS–1543 CHG 00	

SPEC NO.	NAME
1E2966B	IDENT
1E2733	DRAWING–AUTOCAD
1E0198W	BRAND MARKINGS
1E0013C	CONFIDENTIALITY
1E0012A	INTERPRETATION
1E0011	INTPR & TOL

DRN J.O. SCHAIDLE
CHK M.J. SWIFT
APPD N.P. MOUNTJOY
CONT ENG
OTHER RECORDS X

UNLESS OTHERWISE SPECIFIED
DIMENSIONS ARE IN MM [INCH]
DIMENSIONS W/O TOL ARE BASIC

SCALE 1 = 16
SHEET 1 OF 3
THIRD ANGLE PROJECTION
CHG 02 11APR18

CATERPILLAR INC.

THE INFORMATION HEREON IS THE PROPERTY OF CATERPILLAR INC. AND MAY BE REPRODUCED WITHOUT WRITTEN PERMISSION, BY EXPRESS TRANSFER OR ANY OTHER MEANS, ONLY FOR THE PURPOSE OF CARRYING OUT CATERPILLAR BUSINESS.

INSTALLATION–COMPOSITE
C13 OPEN SUB TANK 660 GAL

509–6522 - SKD 24 SUB W973 E