METRIC 509-6532

QTY	ENGINE CONNECTIONS	SIZE	SHEET
1	COOLANT DRAIN	ø19.1 [0.75] ID	2
1	EXHAUST	ø203.0 [ø7.99] OD	2
1	OIL DRAIN	ø19.1 [0.75] ID	2

QTY	POSSIBLE TANK CONNECTIONS	SIZE	SHEET
1	BASIN TANK EMERGENCY VENT	5" NPT THD	2
2	CUSTOMER CONNECTIONS	2" NPTF THD	2
1	FUEL FILLER	4" NPT THD	2
1	MAIN TANK EMERGENCY VENT	5" NPT THD	2
1	SPARE PORT	2" NPT	2

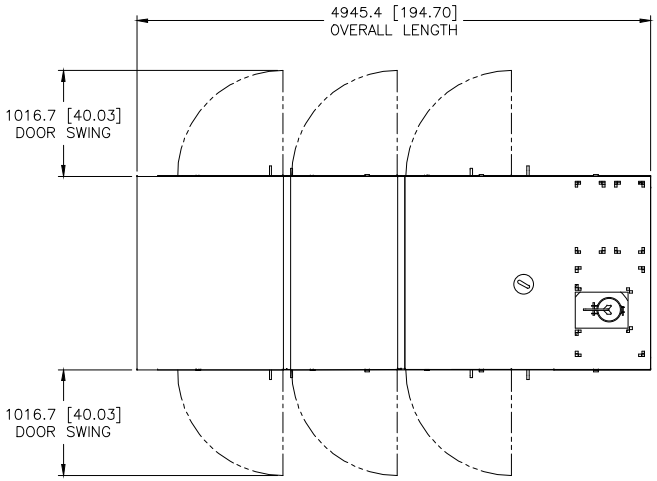

TOP VIEW

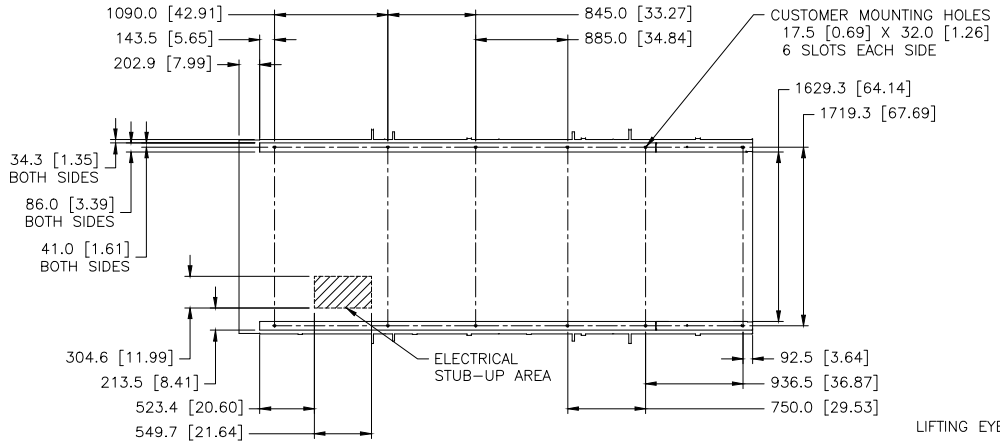

FOOTPRINT
(DIMENSIONED OUTLINE VIEW FROM ABOVE)

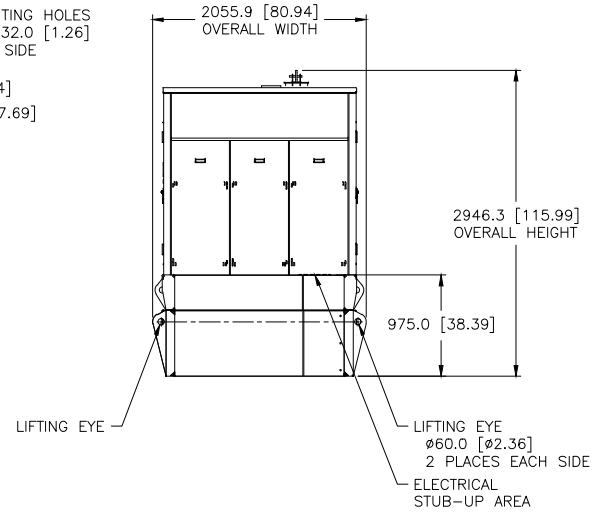

REAR VIEW

PACKAGE LIFTED IN 4 PLACES

PACKAGE SHOWN WITH MORE DETAIL ON SHEET 2

MODEL	TYPE	PRICING AR	ENCLOSURE	FUEL TANK
C13	Y	LS-1503 CHG 00	LS-1511 CHG 00 LS-1513 CHG 00 LS-1519 CHG 00 LS-1512 CHG 00 LS-1514 CHG 00 LS-1520 CHG 00	LS-1526 CHG 00
		LS-1543 CHG 00		

REV	SPEC NO.	NAME
	1E2966B	IDENT
	1E2733	DRAWING-AUTOCAD
	1E0198W	BRAND MARKINGS
	1E0013C	CONFIDENTIALITY
	1E0112A	INTERPRETATION
	1E0011	INTPR & TOL

DRN M.J. SWIFT
CHK M.J. SWIFT
APPD N.P. MOUNTJOY
CHG NOTE: CHP | MAT | MECH | PROD
OTHER RECORDS X
UNLESS OTHERWISE SPECIFIED
DIMENSIONS ARE IN MM [INCH]
DIMENSIONS W/O TOL ARE BASIC
SCALE 1 = 16
SHEET 1 OF 2
THIRD ANGLE PROJECTION
03 07MAY18
CHG DATE

CATERPILLAR INC.

THE INFORMATION HEREON IS THE PROPERTY OF CATERPILLAR INC. AND MAY BE REPRODUCED ONLY WITH WRITTEN PERMISSION, AND SUPPLIED, TRANSFERRED OR DISCLOSED ONLY TO PERSONS AUTHORIZED BY CATERPILLAR INC.

INSTALLATION-COMPOSITE
C13 SA L1 ENCL 660G TANK

509-6532 - DES 24 DWN W973 E