METRIC 523–6098

QTY	ENGINE CONNECTIONS	SIZE	SHEET
1	COOLANT DRAIN	ø19.1 [ø0.75] ID	2
1	EXCESS FUEL RETURN	13/16–16 THD	2
1	EXHAUST	SEE DETAIL A	2
1	FUEL INLET	13/16–16 THD	2
1	FUMES DISPOSAL HOSE	ø50.8 [ø2.00] OD	2
1	OIL DRAIN	ø25.4 [ø1.00] ID	2

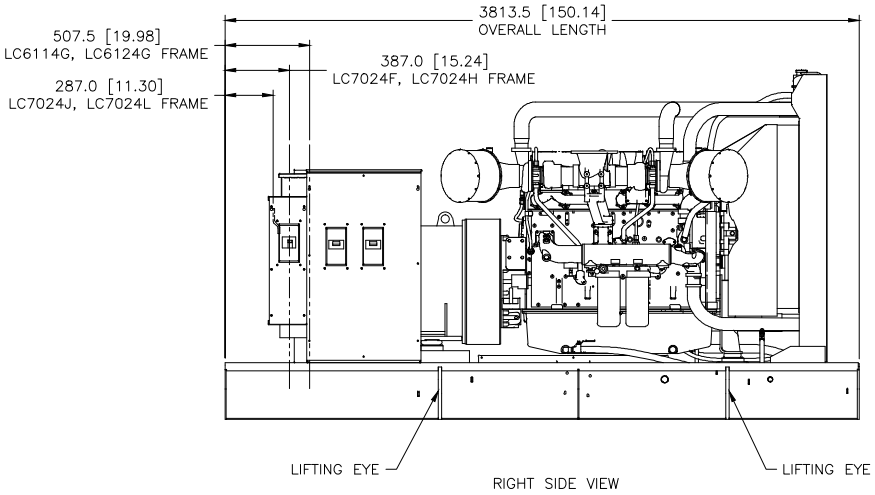

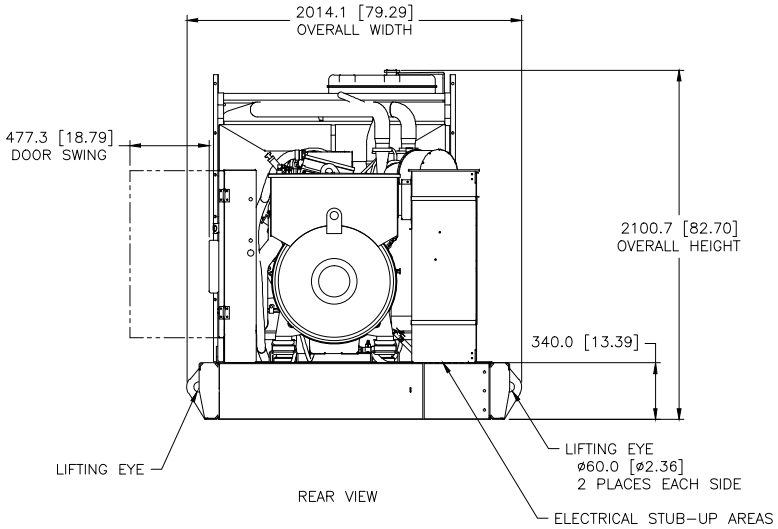

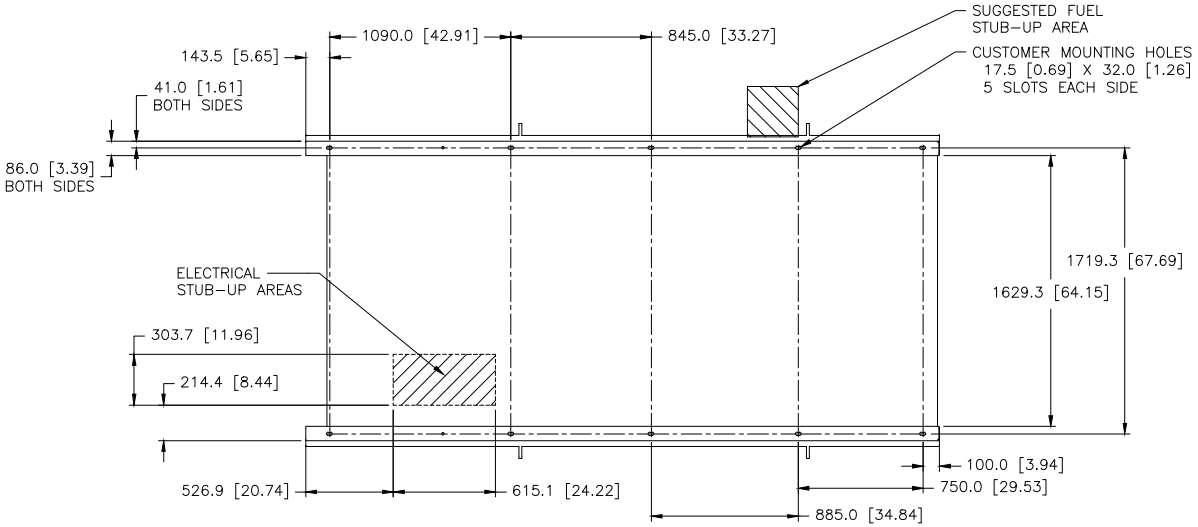

FOOTPRINT
(DIMENSIONED OUTLINE VIEW FROM ABOVE)

PACKAGE LIFTED IN 4 PLACES

PACKAGE SHOWN WITH MORE DETAIL ON SHEET 2

MODEL	TYPE	PRICING AR	BASE
C18	Y	LS–1445 CHG 03	LS–1426 CHG 01

REV	SPEC NO.	NAME
	1E2966B	IDENT
	1E2713	DRAWING–AUTOCAD
	1E0138W	BRAND MARKINGS
	1E0013Q	CONFIDENTIALITY
	1E0122A	INTERPRETATION
	1E0011	INTPR & TOL

DRN M.J. SWIFT
CHK M.J. SWIFT
APPD N.P. MOUNTJOY
EXP | EXP | PROD
RECORDS X

UNLESS OTHERWISE SPECIFIED
DIMENSIONS ARE IN MM [INCH]
DIMENSIONS W/O TOL ARE BASIC

SCALE 1 = 10
DIMENSIONS: MM [IN]
1 = .10mm [0 .3]
SHEET 1 OF 2
THIRD ANGLE PROJECTION
02 02MAR18
CHG DATE

CATERPILLAR INC.

THE INFORMATION HEREON IS THE PROPERTY OF CATERPILLAR INC. AND ITS SUBSIDIARIES AND MAY NOT BE REPRODUCED, OR DISCLOSED, TRANSFERRED OR USED WITHOUT WRITTEN PERMISSION, OR FURNISHED TO ANYONE WITHOUT WRITTEN PERMISSION OF CATERPILLAR INC.

INSTALLATION–COMPOSITE
C18 OPEN WIDE BASE
523–6098
LVLR – DES 24 SUB
CONTROL W973
E