METRIC 523–6098

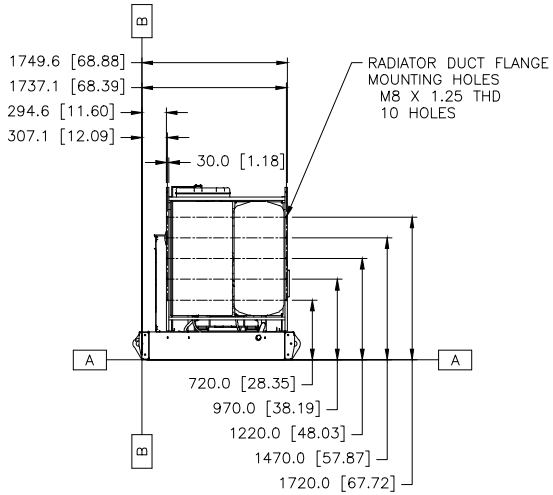

VIEW A–A

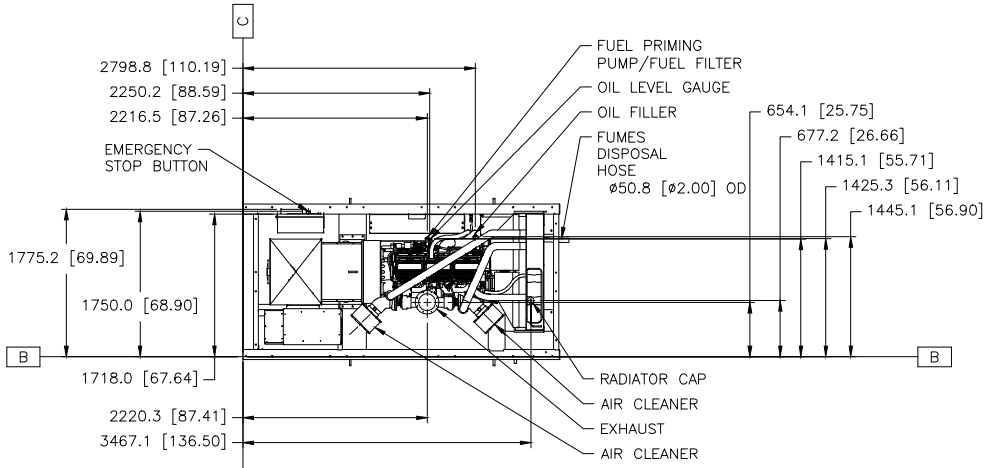

TOP VIEW

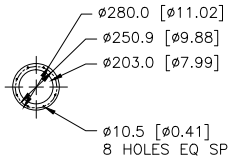

DETAIL A
SCALE 1=10

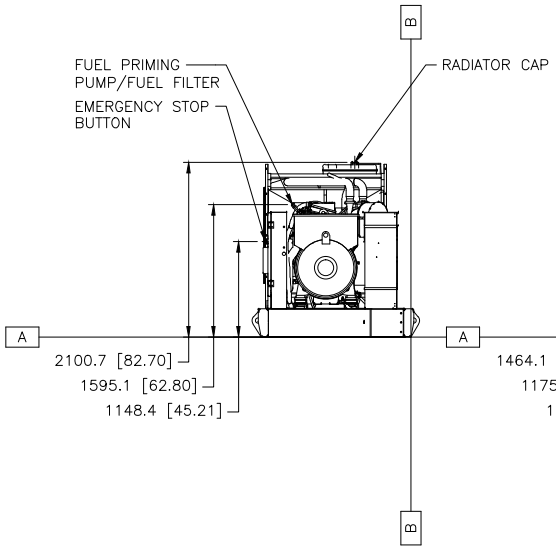

REAR VIEW

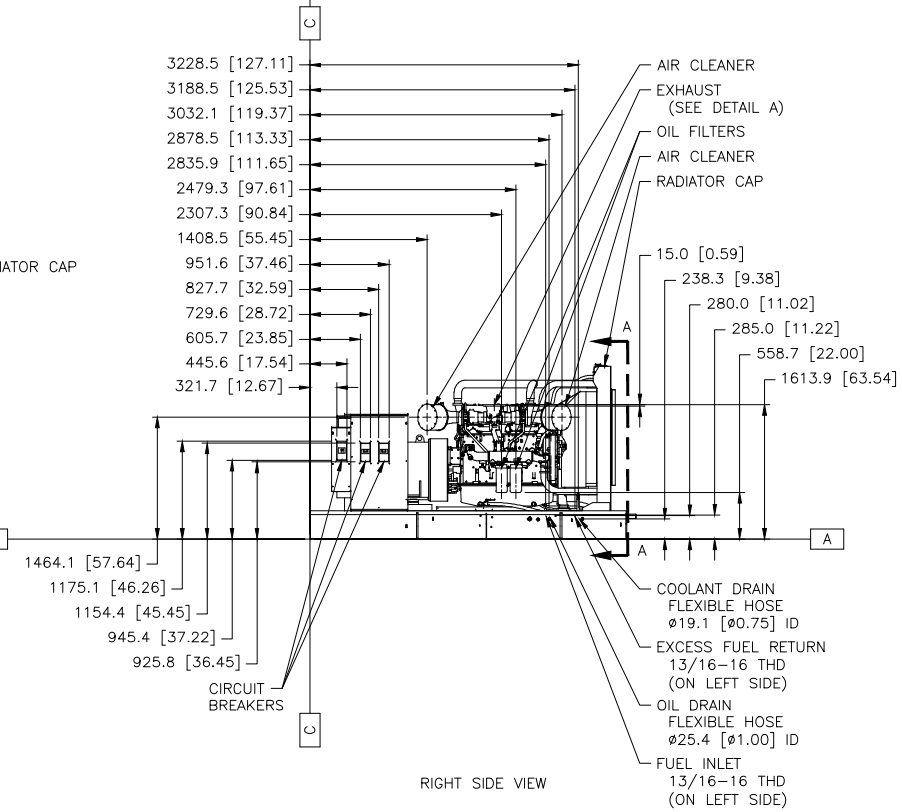

RIGHT SIDE VIEW

REV	SPEC NO.	NAME
	1E2966B	IDENT
	1E2733	DRAWING–AUTOCAD
	1E0138W	BRAND MARKINGS
	1E0013Q	CONFIDENTIALITY
	1E0172A	INTERPRETATION
	1E0011	INTPR & TOL

DTN M.J. SWIFT
CHK M.J. SWIFT
APPD N.P. MOUNTJOY
SUPT | EXP | MFG | PROD
RECORDS X

UNLESS OTHERWISE SPECIFIED
DIMENSIONS ARE IN MM [INCH]
DIMENSIONS W/O TOL ARE BASIC

SCALE 1 = 20
DIMENSIONS IN MM [INCH]
1 ...Uses 25 IN
SHEET 2 OF 2
THIRD ANGLE PROJECTION
02 02APR18
CHG DATE

CATERPILLAR INC.

THE INFORMATION HEREON IS THE PROPERTY OF CATERPILLAR INC. AND ITS SUBSIDIARIES AND MAY CONTAIN PATENTED, PATENT PENDING OR PROPRIETARY INFORMATION. NO PART OF THIS DOCUMENT MAY BE REPRODUCED OR TRANSMITTED IN ANY FORM OR BY ANY MEANS, ELECTRONIC, MECHANICAL, OR OTHERWISE, WITHOUT PRIOR WRITTEN PERMISSION OF CATERPILLAR INC.

INSTALLATION–COMPOSITE
C18 OPEN WIDE BASE

523–6098 | LVLR – | DES 24 SUB | CONTROL W973 | E