METRIC 533-1403

QTY	ENGINE CONNECTIONS	SIZE	SHEETS
1	EXCESS FUEL RETURN	1/2-14 NPTF	2, 3
1	EXHAUST	SEE DETAIL SHEET 7	4, 6, 7
1	FUEL INLET	1/2-14 NPTF	2, 3
1	FUMES DISPOSAL TUBE	ø50.8 [ø2.00] ID	2, 6
1	OIL DRAIN	1 11-1/2 NPTF THD	2, 3
1	COOLANT DRAIN	1/2-14 NPTF	2, 3

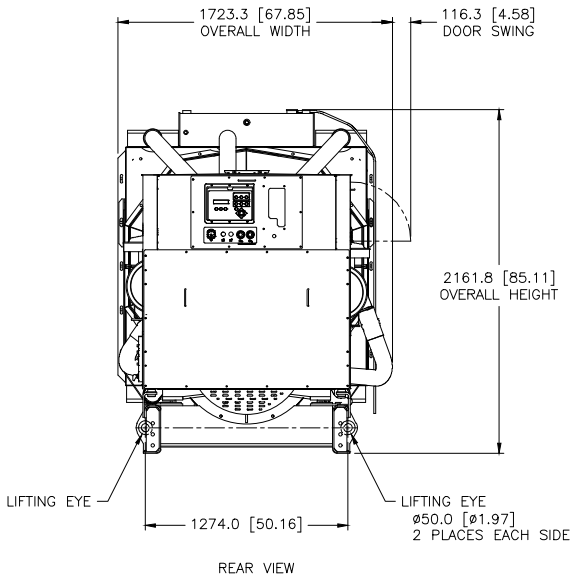

REAR VIEW

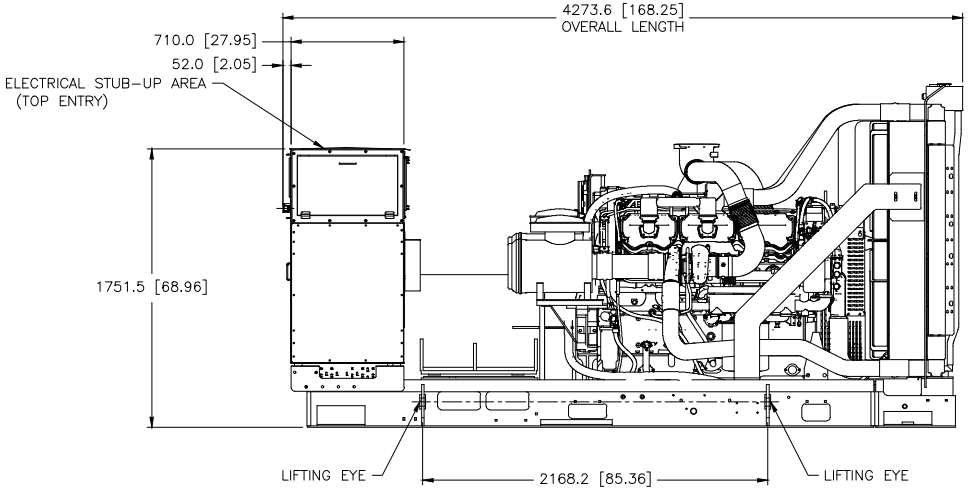

RIGHT SIDE VIEW

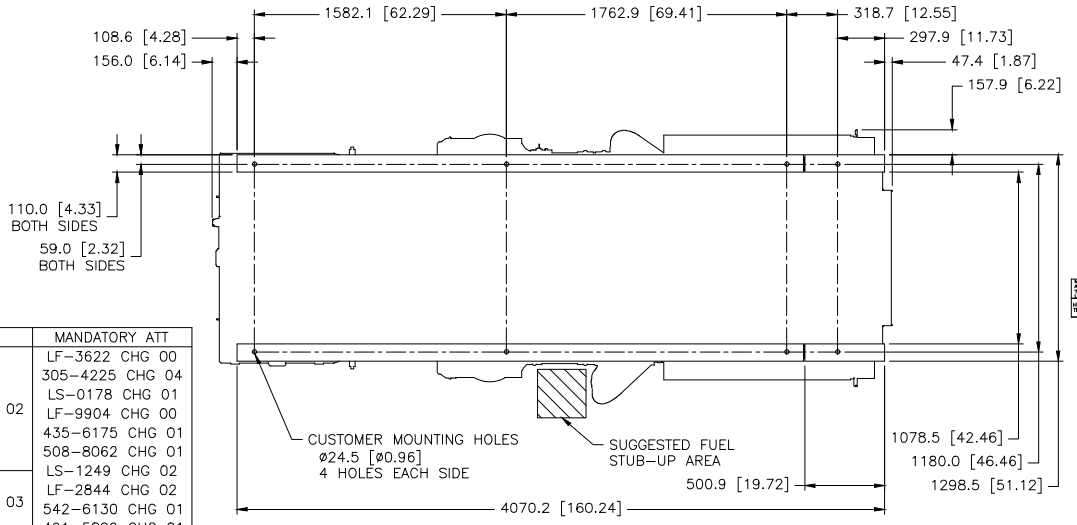

FOOTPRINT
(DIMENSIONED OUTLINE VIEW FROM ABOVE)

MODEL	TYPE	PRICING AR	GENERATORS	MANDATORY ATT
C27	6	LF-3344 CHG 06	385-0654 CHG 02	LF-3622 CHG 00 305-4225 CHG 04 LS-0178 CHG 01 LF-9904 CHG 00 435-6175 CHG 01 508-8062 CHG 01 LS-1249 CHG 02 LF-2844 CHG 02 542-6130 CHG 01 491-5899 CHG 01 491-5896 CHG 02 491-5856 CHG 02 446-5634 CHG 01
		LF-3399 CHG 05		
		LF-3398 CHG 05	385-0624 CHG 03	
		LF-3345 CHG 06	385-0622 CHG 04	

1E2966B	IDENT
1E2733	DRAWING-AUTOCAD
1E0198W	BRAND MARKINGS
1E0013G	CONFIDENTIALITY
1E0012A	INTERPRETATION
1E0011	INTPR & TOL

DWN	J.E. NELSON	
CHK	L. FENG	
APPD	N.P. MOUNTJOY	
CHK		
STAGE	RECORDS	X

UNLESS OTHERWISE SPECIFIED
DIMENSIONS ARE IN MM [INCH]
DIMENSIONS W/O TOL ARE BASIC

SCALE 1 = 10
SHEET 1 OF 7
THIRD ANGLE PROJECTION
02 01NOV19
CHG DATE

CATERPILLAR INC.

THE INFORMATION CONTAINED IN THE PROPERTY OF CATERPILLAR INC. AND/OR ITS SUBSIDIARIES, AND/OR ANY OTHER PERSON(S) ANY OTHER PERSON(S) PROHIBITED. THE INFORMATION CONTAINED IN THIS DRAWING IS PROHIBITED.

INSTALLATION-ENGINE
C27 PACKAGE GENSET

533-1403 - W927 E