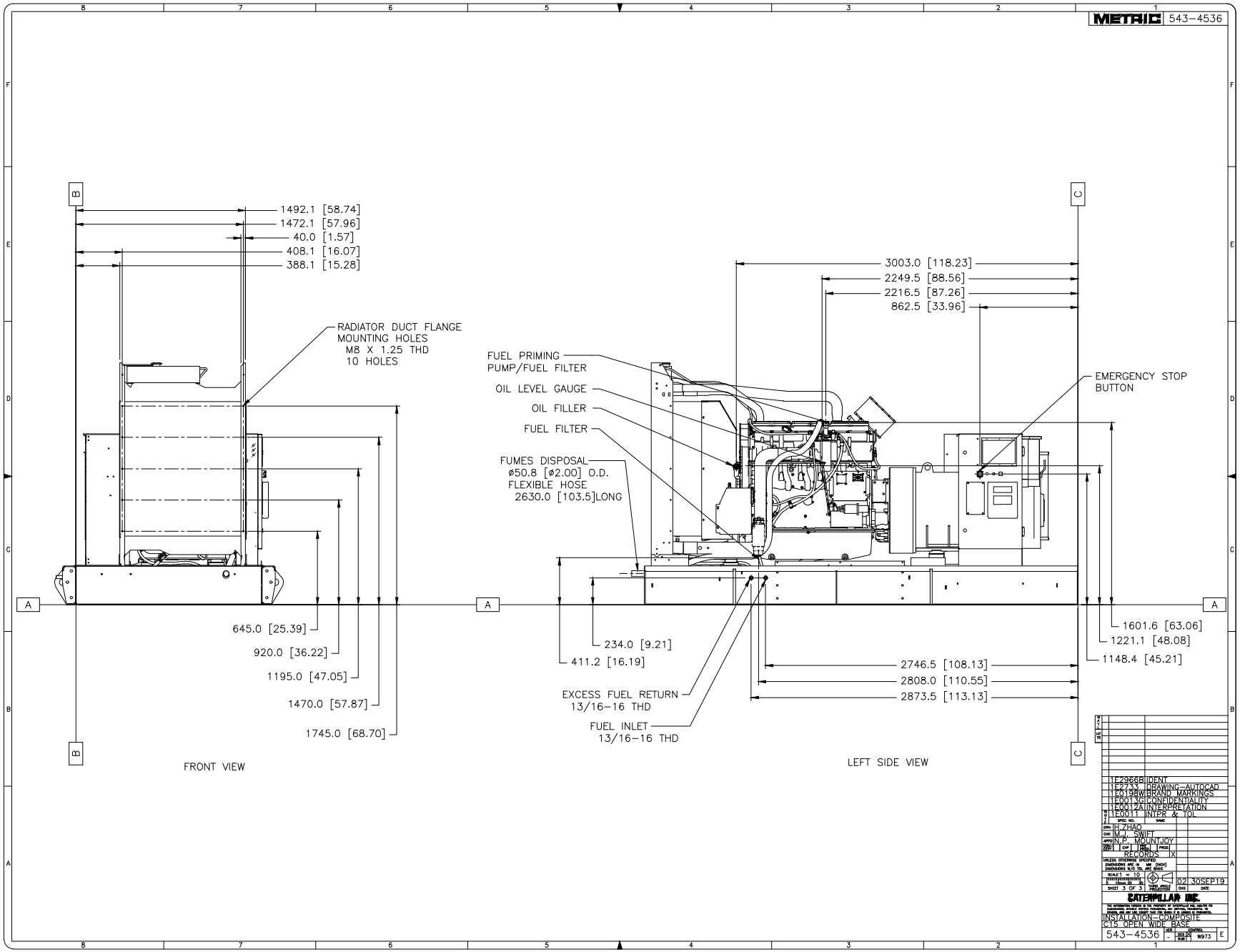
METRIC 543-4536
1492.1 [58.74]
1472.1 [57.96]
40.0 [1.57]
408.1 [16.07]
388.1 [15.28]
RADIATOR DUCT FLANGE
MOUNTING HOLES
M8 X 1.25 THD
10 HOLES
645.0 [25.39]
920.0 [36.22]
1195.0 [47.05]
1470.0 [57.87]
1745.0 [68.70]
FRONT VIEW
3003.0 [118.23]
2249.5 [88.56]
2216.5 [87.26]
862.5 [33.96]
FUEL PRIMING
PUMP/FUEL FILTER
OIL LEVEL GAUGE
OIL FILLER
FUEL FILTER
FUMES DISPOSAL
ø50.8 [ø2.00] O.D.
FLEXIBLE HOSE
2630.0 [103.5]LONG
EMERGENCY STOP
BUTTON
234.0 [9.21]
411.2 [16.19]
EXCESS FUEL RETURN
13/16-16 THD
FUEL INLET
13/16-16 THD
2746.5 [108.13]
2808.0 [110.55]
2873.5 [113.13]
1601.6 [63.06]
1221.1 [48.08]
1148.4 [45.21]
LEFT SIDE VIEW
1E2966B IDENT
1E2733 DRAWING-AUTOCAD
1E0198W BRAND MARKINGS
1E0013G CONFIDENTIALITY
1E0012A INTERPRETATION
1E0011 INTPR & TOL
H.ZHAO
M.J. SWIFT
N.P. MOUNTJOY
RECORDS X
SCALE 1 = 10
SHEET 3 OF 3
02 30SEP19
CATERPILLAR INC.
INSTALLATION-COMPOSITE
C15 OPEN WIDE BASE
543-4536
W973
E