METRIC 571–3846

| QTY | ENGINE CONNECTIONS | SIZE | SHEET |
|---|---|---|---|
| 1 | COOLANT DRAIN | ø19.1 [ø0.75] ID | 2 |
| 1 | EXCESS FUEL RETURN | 13/16–16 THD | 3 |
| 1 | EXHAUST | DETAIL A | 2 |
| 1 | FUEL INLET | 13/16–16 THD | 3 |
| 1 | FUMES DISPOSAL HOSE | ø46.8 [ø1.84] ID | 3 |
| 1 | OIL DRAIN | ø25.4 [ø1.00] ID | 2 |

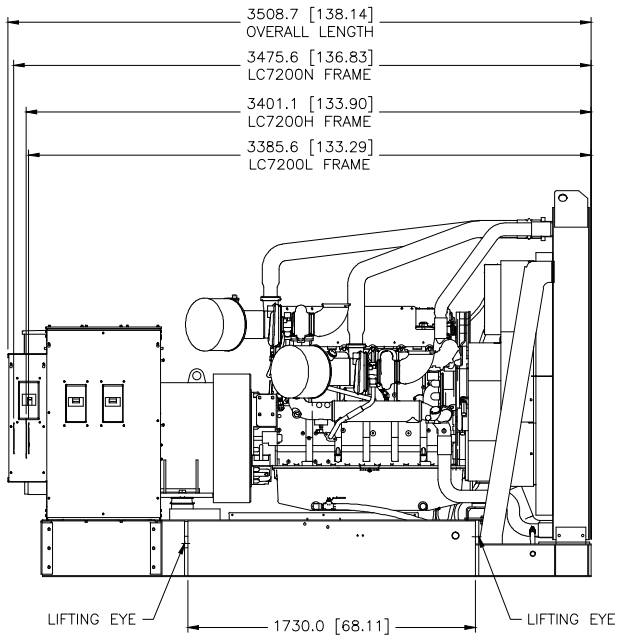


RIGHT SIDE VIEW

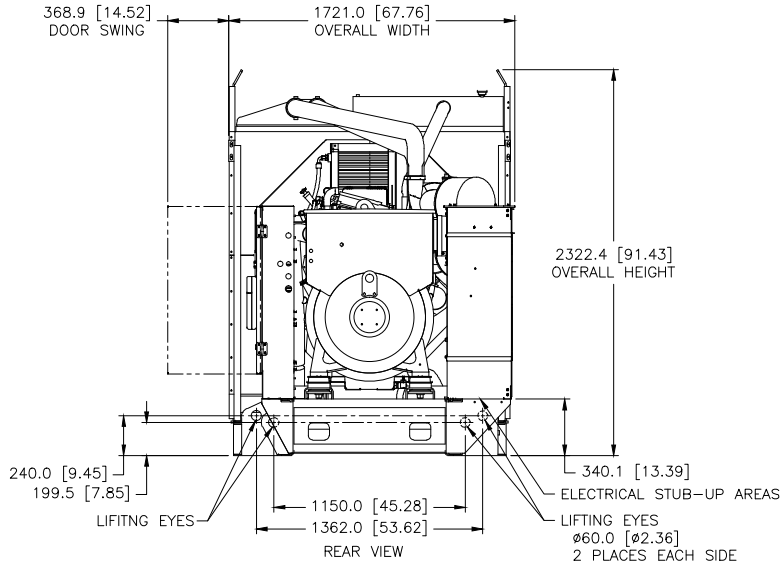


REAR VIEW

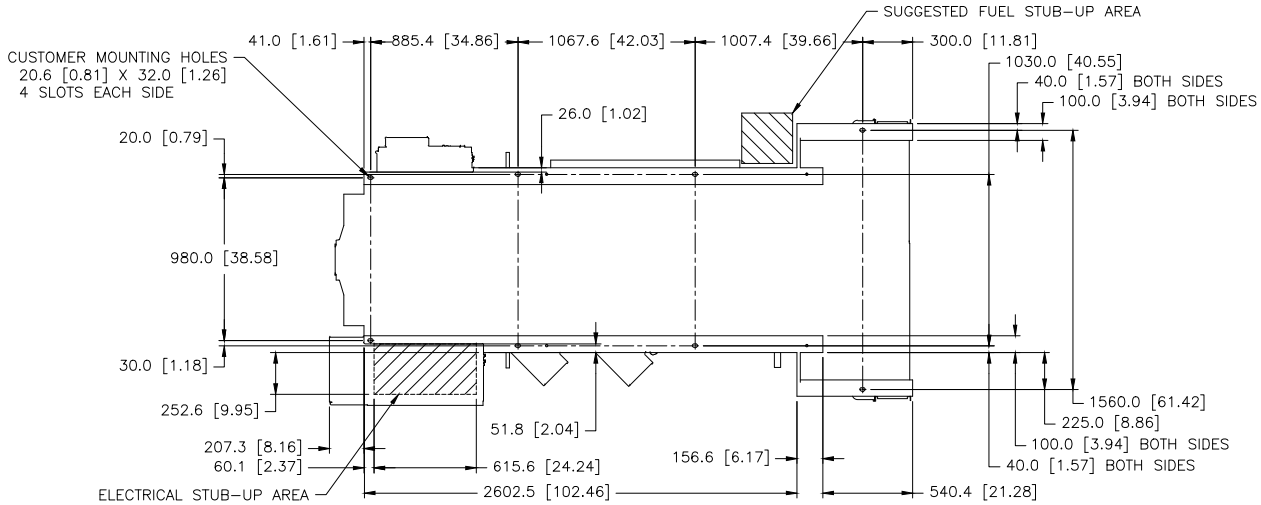


FOOTPRINT
(DIMENSIONED OUTLINE VIEW FROM ABOVE)
(RIGHT SIDE ORIENTATION)

PACKAGE LIFTED IN 4 PLACES

PACKAGE SHOWN WITH MORE DETAIL ON SHEETS 2, 3

| MODEL | TYPE | PRICING AR | BASE |
|---|---|---|---|
| C18 | – | LS–3489 CHG 00 | LS–3500 CHG 01 |

REV 7–24
1E2966B IDENT
1E2713 DRAWING–AUTOCAD
1E0138W BRAND MARKINGS
1E0013C CONFIDENTIALITY
1E0122A INTERPRETATION
1E0011 INTPR & TOL
SPEC NO. NAME
DRN B.R.VILLANA
CHK M.J. SWIFT
APPD N.P. MOUNTJOY
REC'D EXP PROD PROD
RECORDS X
UNLESS OTHERWISE SPECIFIED
DIMENSIONS ARE IN MM [INCH]
DIMENSIONS W/O TOL ARE BASIC
SCALE 1 = 10
DIMENSIONS: mm in
1 inch 25 mm
SHEET 1 OF 3
THIRD ANGLE PROJECTION
00 20SEP18
CHG DATE
CATERPILLAR INC.
THE INFORMATION HEREON IS THE PROPERTY OF CATERPILLAR INC. AND ITS SUBSIDIARIES AND MAY NOT BE REPRODUCED, OR DISPLAYED, TRANSMITTED OR PUBLISHED WITHOUT WRITTEN PERMISSION. ALL RIGHTS RESERVED.
INSTALLATION–COMPOSITE
C18PD OPEN NARROW BASE
571–3846
LVR – SKD 24 SUB W973
CONTROL
E