METRIC 571–3846

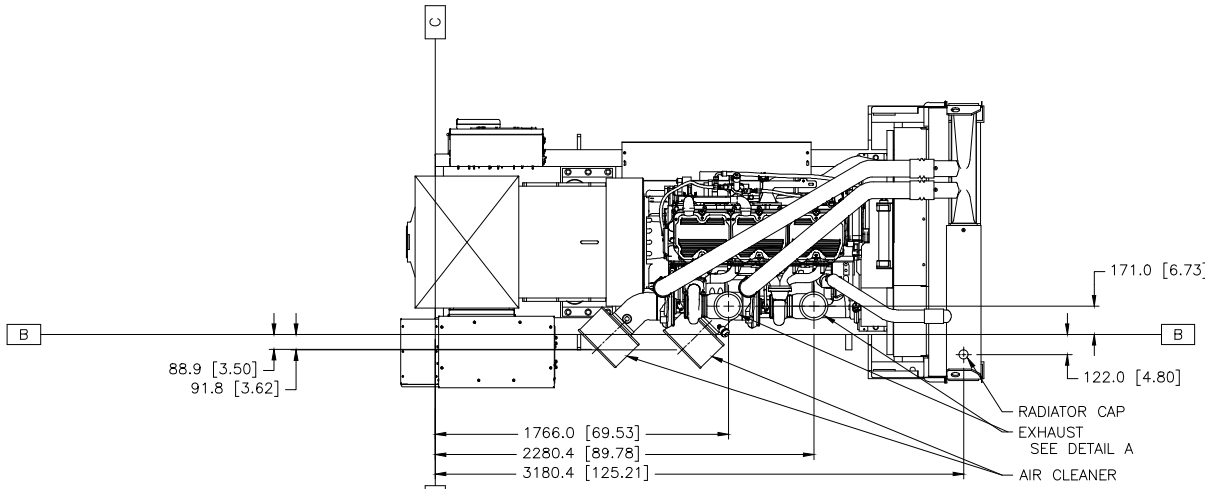

TOP VIEW
(RIGHT SIDE ORIENTATION)

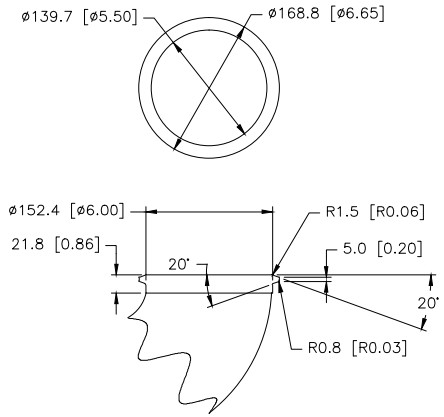

DETAIL A
EXHAUST FLANGE
CONNECTION
1=5

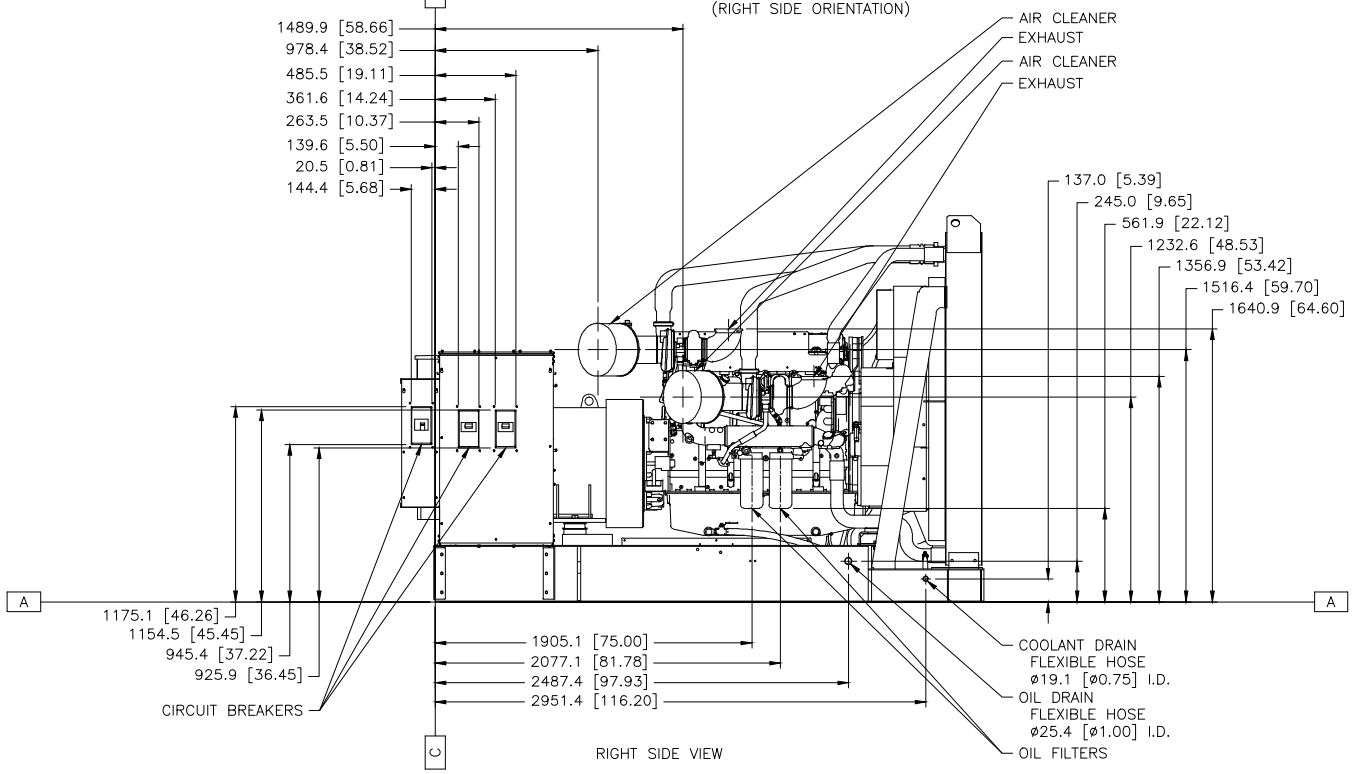

RIGHT SIDE VIEW

REV	SPEC NO.	NAME
1E2966B	IDENT	
1E2713	DRAWING–AUTOCAD	
1E0138W	BRAND MARKINGS	
1E0013C	CONFIDENTIALITY	
1E0122A	INTERPRETATION	
1E0011	INTPR & TOL	

DRN B.R.VILLENA
CHK M.J. SWIFT
APPD N.P. MOUNTJOY
RELEASED: CAP | ENG | PROD
RECORDS X

UNLESS OTHERWISE SPECIFIED:
DIMENSIONS ARE IN MM [INCH]
DIMENSIONS W/O TOL ARE BASIC

SCALE 1 = 10
DIMENSIONS: MM
IN [Uses 25 IN]
SHEET 2 OF 3
THIRD ANGLE PROJECTION
00 20SEP18
CHG DATE

CATERPILLAR INC.

THE INFORMATION HEREON IS THE PROPERTY OF CATERPILLAR INC. AND ITS SUBSIDIARIES AND MAY NOT BE REPRODUCED, OR COPIED, TRANSFERRED TO PERSONS OR PLACES WHICH DO NOT HAVE PROPER AUTHORIZATION.

INSTALLATION–COMPOSITE
C18PD OPEN NARROW BASE

571–3846 | LVR – | DES 24 SUB | CONTROL W973 | E