METRIC 571–3847

QTY	ENGINE CONNECTIONS	SIZE	SHEET
1	COOLANT DRAIN	ø19.1 [ø0.75] ID	2
1	EXCESS FUEL RETURN	13/16–16 THD	3
1	EXHAUST	DETAIL A	2
1	FUEL INLET	13/16–16 THD	3
1	FUMES DISPOSAL HOSE	ø46.8 [ø1.84] ID	3
1	OIL DRAIN	ø25.4 [ø1.00] ID	2

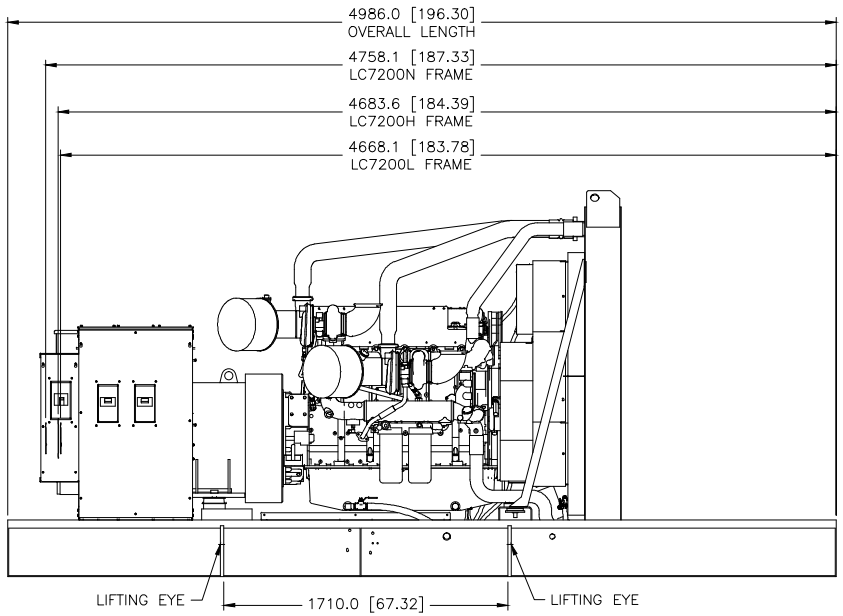

RIGHT SIDE VIEW

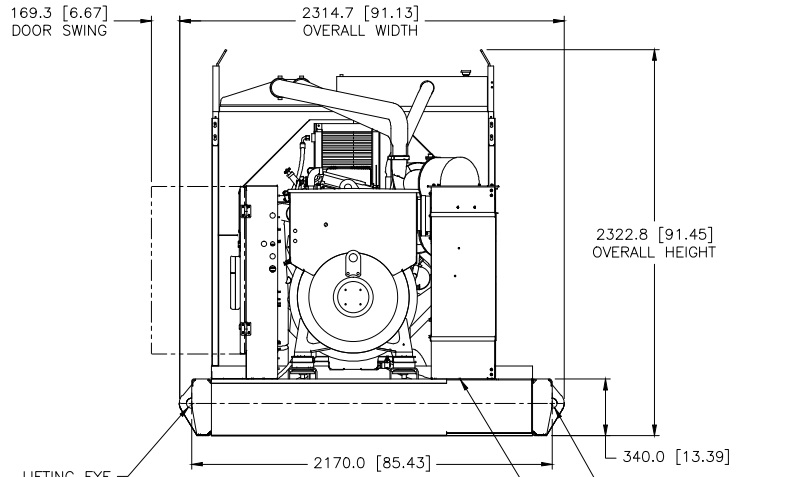

REAR VIEW

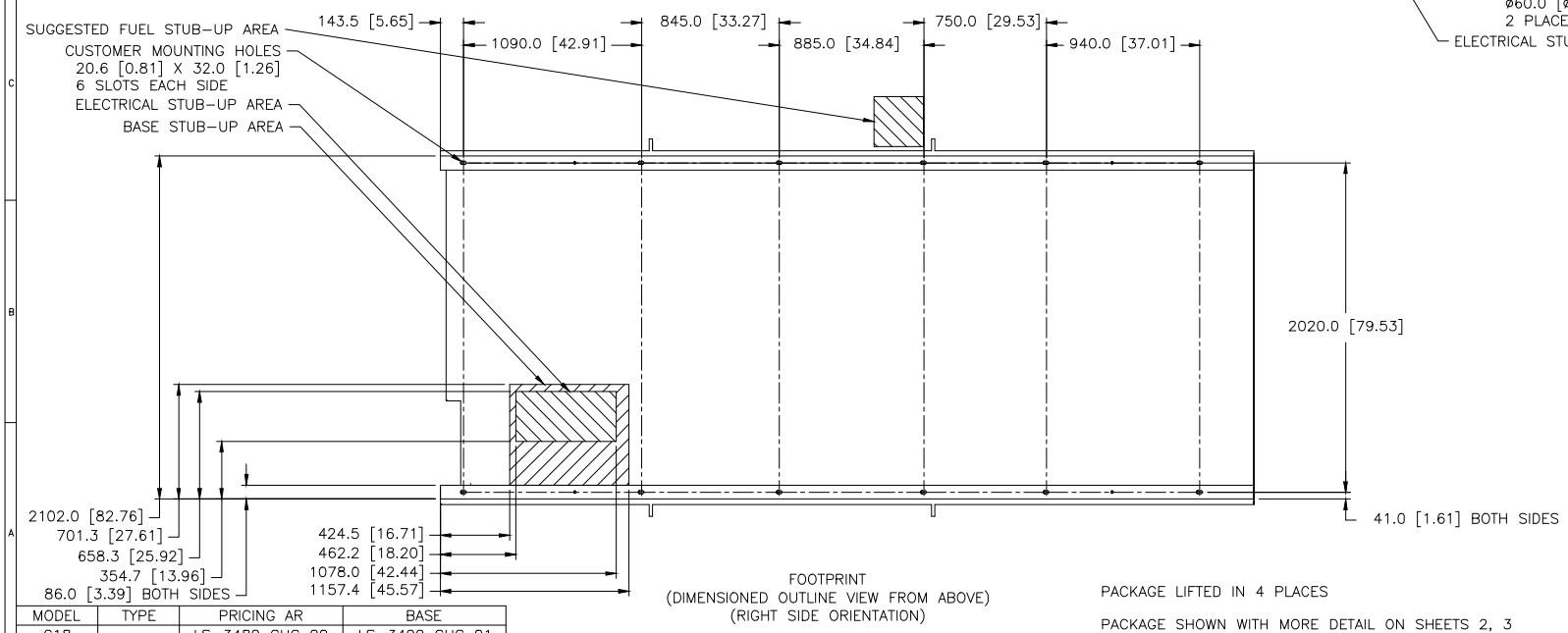

FOOTPRINT
(DIMENSIONED OUTLINE VIEW FROM ABOVE)
(RIGHT SIDE ORIENTATION)

PACKAGE LIFTED IN 4 PLACES

PACKAGE SHOWN WITH MORE DETAIL ON SHEETS 2, 3

MODEL	TYPE	PRICING AR	BASE
C18	–	LS–3489 CHG 00	LS–3499 CHG 01

REV	SPEC NO.	NAME
	1E2966B	IDENT
	1E2713	DRAWING–AUTOCAD
	1E0138W	BRAND MARKINGS
	1E0013Q	CONFIDENTIALITY
	1E0122A	INTERPRETATION
	1E0011	INTPR & TOL

DRN B.R.VILLANA
CHK M.J. SWIFT
APPD N.P. MOUNTJOY
RECORDS X

UNLESS OTHERWISE SPECIFIED
DIMENSIONS ARE IN MM [INCH]
DIMENSIONS W/O TOL ARE BASIC
SCALE 1 = 10
SHEET 1 OF 3
THIRD ANGLE PROJECTION
CHG 00 DATE 20SEP18

CATERPILLAR INC.

THE INFORMATION HEREON IS THE PROPERTY OF CATERPILLAR INC. AND ITS SUBSIDIARIES WITHOUT WRITTEN PERMISSION, NO COPYING, TRANSFER OR DISCLOSURE WHICH WOULD BE DETRIMENTAL TO CATERPILLAR INC. IS PERMITTED.

INSTALLATION–COMPOSITE
C18PD OPEN WIDE BASE

571–3847 LSR – DES 24 SUB W973 E