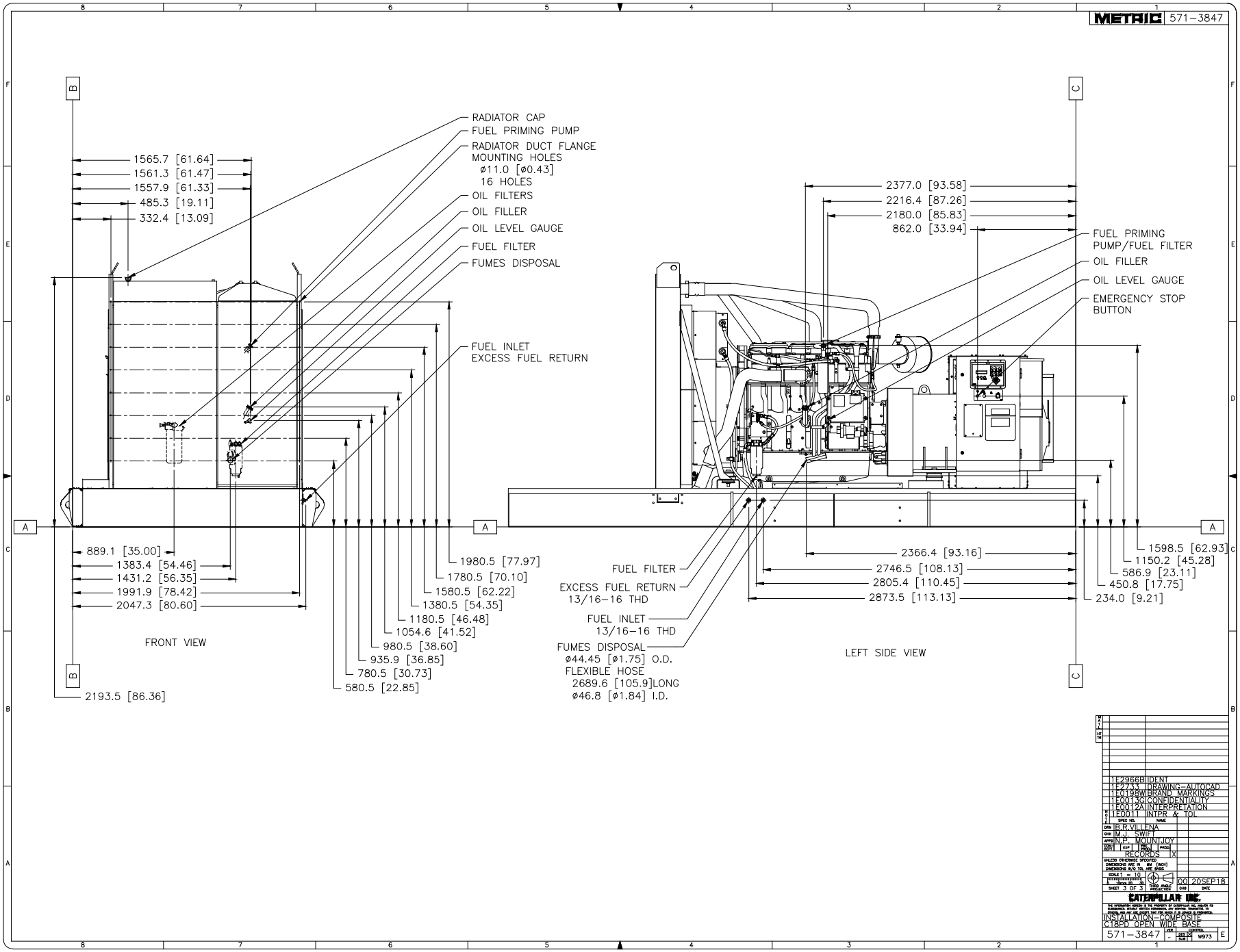
METRIC 571-3847
RADIATOR CAP
FUEL PRIMING PUMP
RADIATOR DUCT FLANGE MOUNTING HOLES ø11.0 [ø0.43] 16 HOLES
OIL FILTERS
OIL FILLER
OIL LEVEL GAUGE
FUEL FILTER
FUMES DISPOSAL
FUEL INLET EXCESS FUEL RETURN
1565.7 [61.64]
1561.3 [61.47]
1557.9 [61.33]
485.3 [19.11]
332.4 [13.09]
889.1 [35.00]
1383.4 [54.46]
1431.2 [56.35]
1991.9 [78.42]
2047.3 [80.60]
2193.5 [86.36]
1980.5 [77.97]
1780.5 [70.10]
1580.5 [62.22]
1380.5 [54.35]
1180.5 [46.48]
1054.6 [41.52]
980.5 [38.60]
935.9 [36.85]
780.5 [30.73]
580.5 [22.85]
FRONT VIEW
2377.0 [93.58]
2216.4 [87.26]
2180.0 [85.83]
862.0 [33.94]
FUEL PRIMING PUMP/FUEL FILTER
OIL FILLER
OIL LEVEL GAUGE
EMERGENCY STOP BUTTON
FUEL FILTER
EXCESS FUEL RETURN 13/16-16 THD
FUEL INLET 13/16-16 THD
FUMES DISPOSAL ø44.45 [ø1.75] O.D. FLEXIBLE HOSE 2689.6 [105.9]LONG ø46.8 [ø1.84] I.D.
2366.4 [93.16]
2746.5 [108.13]
2805.4 [110.45]
2873.5 [113.13]
1598.5 [62.93]
1150.2 [45.28]
586.9 [23.11]
450.8 [17.75]
234.0 [9.21]
LEFT SIDE VIEW
1E2966B IDENT
1E2733 DRAWING-AUTOCAD
1E0198W BRAND MARKINGS
1E0013G CONFIDENTIALITY
1E0012A INTERPRETATION
1E0011 INTPR & TOL
SPEC NO. NAME
DRN B.R.VILLENA
CHK M.J. SWIFT
APPD N.P. MOUNTJOY
RECORDS X
UNLESS OTHERWISE SPECIFIED DIMENSIONS ARE IN MM [INCH] DIMENSIONS W/O TOL ARE BASIC
SCALE 1 = 10
SHEET 3 OF 3
THIRD ANGLE PROJECTION
00 20SEP18
CHG DATE
CATERPILLAR INC.
INSTALLATION-COMPOSITE
C18PD OPEN WIDE BASE
571-3847
W973
E