METRIC 571–3850

QTY	ENGINE CONNECTIONS	SIZE	SHEETS
1	COOLANT DRAIN	ø19.1 [0.75] ID	2
1	EXHAUST	ø254.0 [10.00] OD	2
1	OIL DRAIN	ø25.4 [1.00] ID	2

QTY	POSSIBLE TANK CONNECTIONS	SIZE	SHEETS
1	BASIN TANK EMERGENCY VENT	6" NPTF THD	3
1	PORT	2" NPTF THD	3
1	FUEL FILLER	4" NPTF THD	3
1	MAIN TANK EMERGENCY VENT	6" NPTF THD	3
2	SPARE PORT	2" NPTF THD	3

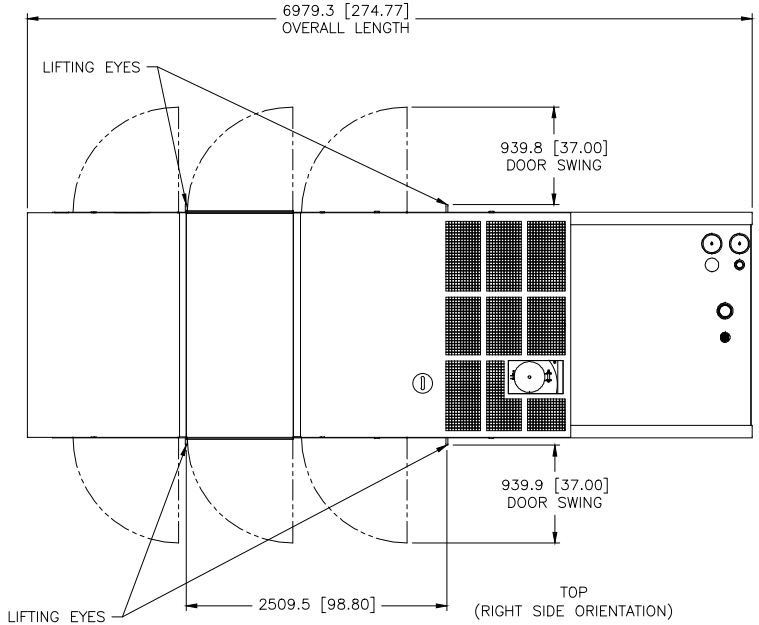

TOP
(RIGHT SIDE ORIENTATION)

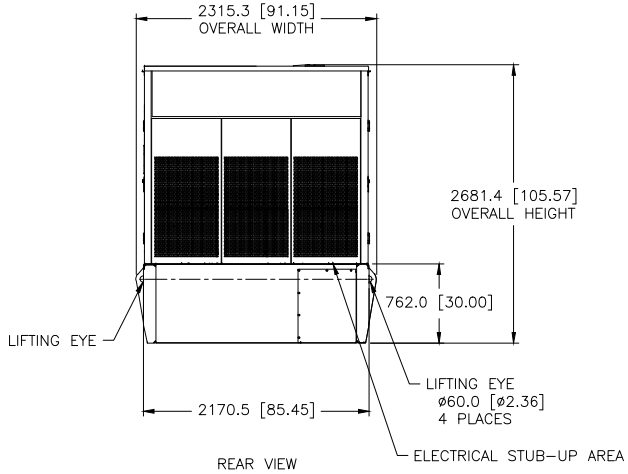

REAR VIEW

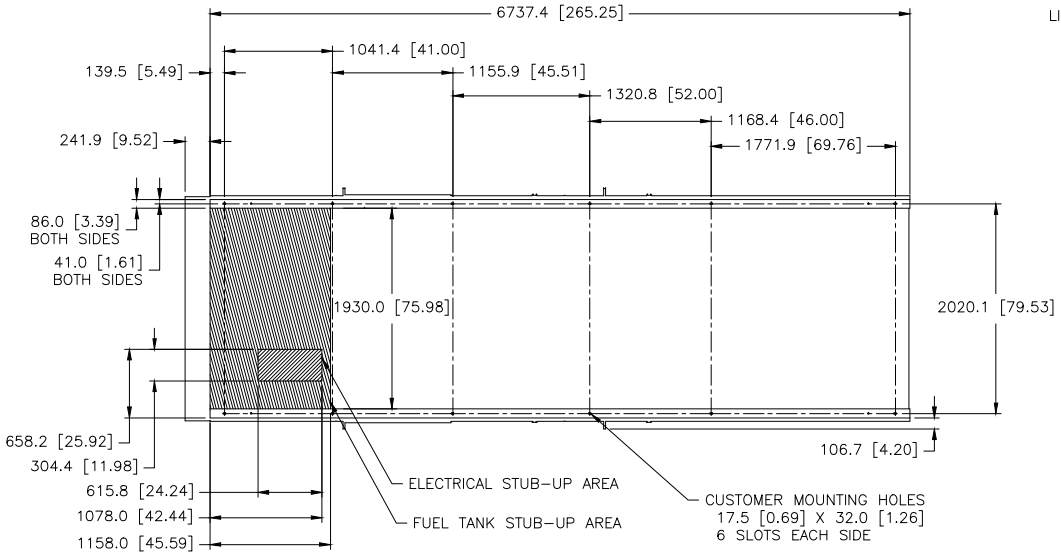

FOOTPRINT
(DIMENSIONED OUTLINE VIEW FROM ABOVE)
(RIGHT SIDE ORIENTATION)

MODEL	TYPE	PRICING AR	ENCLOSURE	TANK
C18	–	LS–3489 CHG 00	LS–3531 CHG 01	LS–3497 CHG 02
			LS–3533 CHG 01	

PACKAGE LIFTED IN 4 PLACES

PACKAGE SHOWN WITH MORE DETAIL ON SHEETS 2 & 3

REV	SYM	DESCRIPTION	DATE	APPD
1		1E2966B IDENT		
2		1E2733 DRAWING–AUTOCAD		
3		1E0138W BRAND MARKINGS		
4		1E0013C CONFIDENTIALITY		
5		1E0122A INTERPRETATION		
6		1E0011 INTPR & TOL		

DRN M.J. SWIFT
CHK M.J. SWIFT
APPD N.P. MOUNTJOY
CHG RECORDS X

UNLESS OTHERWISE SPECIFIED:
DIMENSIONS ARE IN MM [INCH]
DIMENSIONS W/O TOL ARE BASIC

SCALE 1 = 16
SHEET 1 OF 3
THIRD ANGLE PROJECTION
CHG 00 19SEP18

CATERPILLAR INC.

THE INFORMATION HEREON IS THE PROPERTY OF CATERPILLAR INC. AND ITS SUBSIDIARIES AND MUST NOT BE DISCLOSED, USED OR REPRODUCED WITHOUT WRITTEN PERMISSION, OR FURNISH TO ANYONE IN ANY MANNER OTHER THAN TO THE OWNER OF THIS DRAWING.

INSTALLATION–COMPOSITE
C18PD SA L1 ENCL W/24HRTK

571–3850 – DES 24 SUB W973 E