METRIC 587-3964

QTY	ENGINE CONNECTIONS	SIZE	SHEETS
1	COOLANT DRAIN	ø19.1 [0.75] ID	2
1	OIL DRAIN	ø25.4 [1.00] ID	2
1	EXHAUST	ø254.0 [10.00] OD	2

QTY	POSSIBLE TANK CONNECTIONS	SIZE	SHEETS
1	BASIN TANK EMERGENCY VENT	6" NPTF THD	3
1	BASIN LEAK DETECTION	1 1/4" NPTF THD	3
1	MAIN TANK EMERGENCY VENT	6" NPTF THD	3
1	NORMAL VENT	2" NPT THD	3
2	SPARE PORTS	2" NPTF THD	3
1	FUEL FILL	4" NPT THD	3

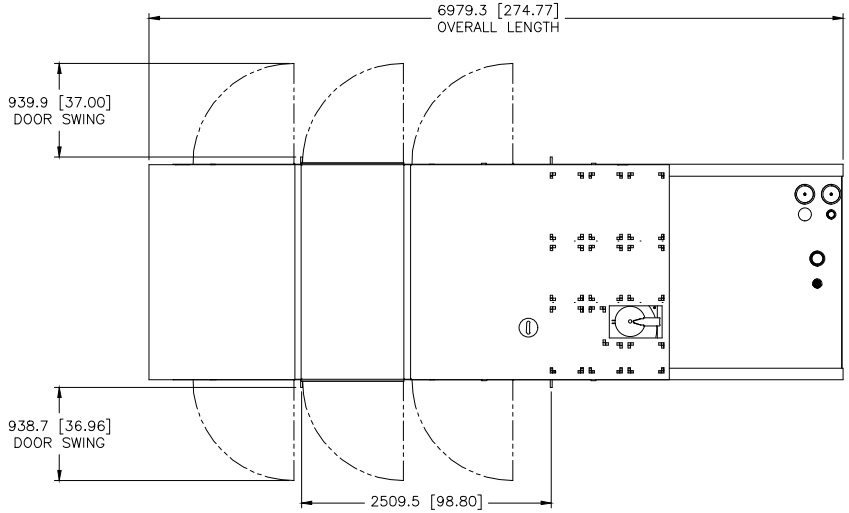

TOP VIEW
[RIGHT SIDE ORIENTATION]

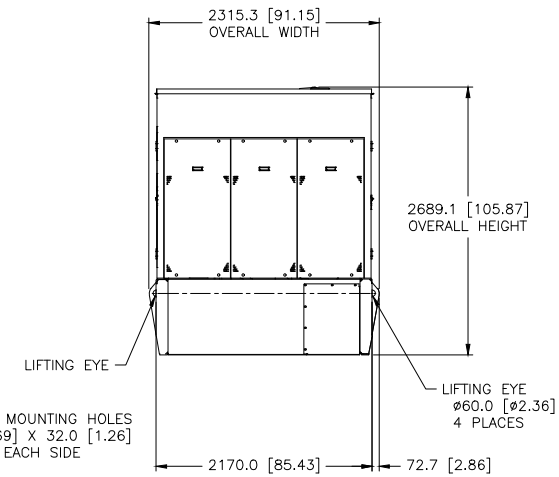

REAR VIEW

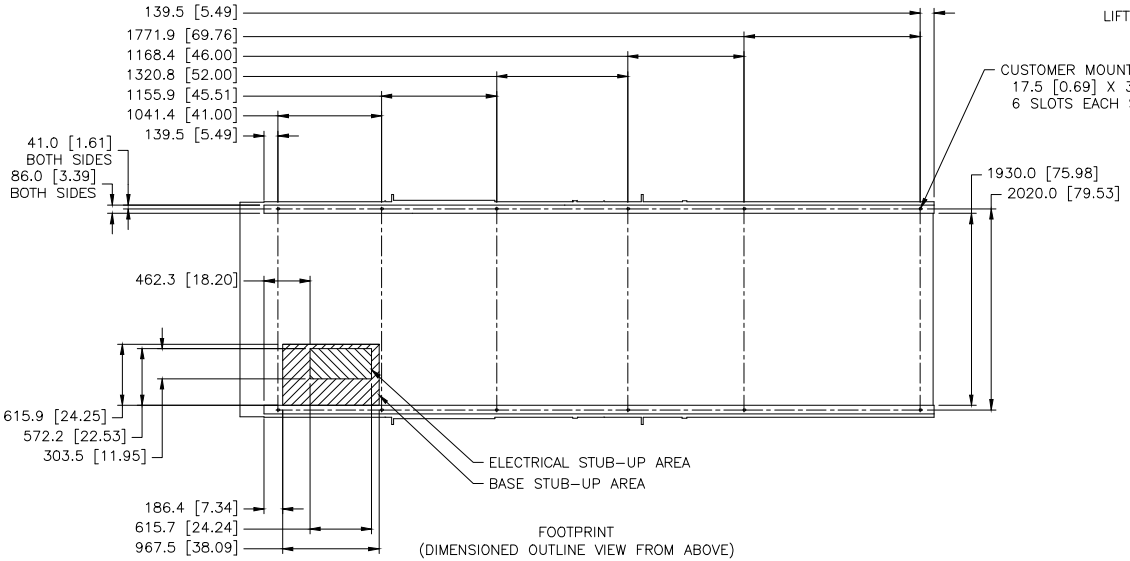

FOOTPRINT
(DIMENSIONED OUTLINE VIEW FROM ABOVE)

MODEL	TYPE	PRICING AR	ENCLOSURE	TANK
C18	Y	LS-3489 CHG 00	LS-3737 CHG 02 LS-3739 CHG 01	LS-3497 CHG 02

1E2966B IDENT
1E2733 DRAWING-AUTOCAD
1E0198W BRAND MARKINGS
1E0013G CONFIDENTIALITY
1E0012A INTERPRETATION
1E0011 INTPR & TOL

DRN J. E. NELSON
CHK M.J. SWIFT
APPD N.P. MOUNTJOY
STAGE RECORDS X

UNLESS OTHERWISE SPECIFIED
DIMENSIONS ARE IN MM [INCH]
DIMENSIONS W/O TOL ARE BASIC

SCALE 1 = 16
SHEET 1 OF 3
THIRD ANGLE PROJECTION
00 25OCT19

CATERPILLAR INC.

THE INFORMATION HEREIN IS THE PROPERTY OF CATERPILLAR INC. AND/OR ITS SUBSIDIARIES. DO NOT COPY OR DISCLOSE THIS DRAWING OR DESIGN, OR USE ANY PART OF THIS DRAWING OR DESIGN IN ANY MANNER WITHOUT WRITTEN PERMISSION.

INSTALLATION-COMPOSITE
C18PD ALUM ENCL W/24HR TK
587-3964 - W973 E