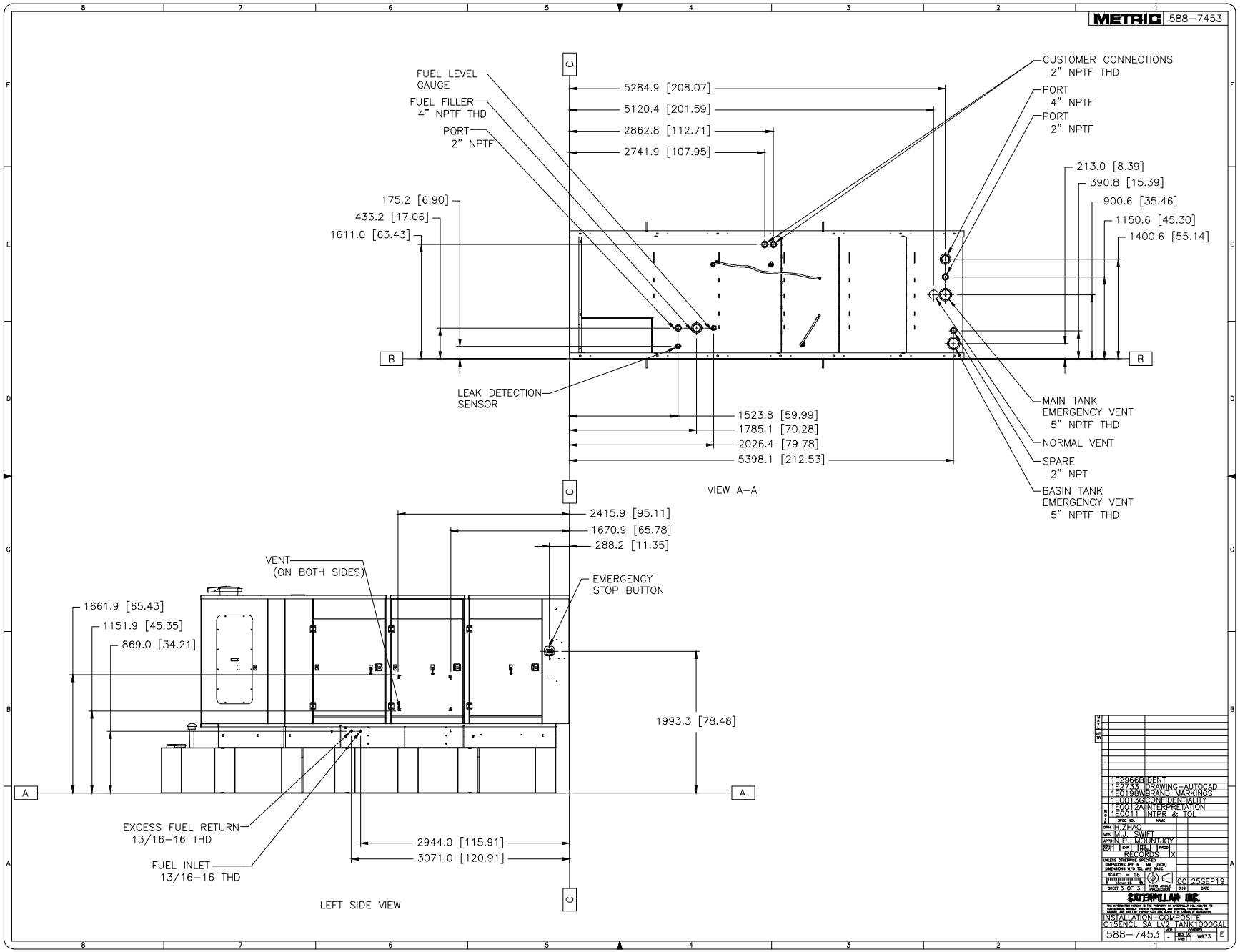
METRIC 588-7453
FUEL LEVEL GAUGE
FUEL FILLER 4" NPTF THD
PORT 2" NPTF
5284.9 [208.07]
5120.4 [201.59]
2862.8 [112.71]
2741.9 [107.95]
CUSTOMER CONNECTIONS 2" NPTF THD
PORT 4" NPTF
PORT 2" NPTF
213.0 [8.39]
390.8 [15.39]
900.6 [35.46]
1150.6 [45.30]
1400.6 [55.14]
175.2 [6.90]
433.2 [17.06]
1611.0 [63.43]
LEAK DETECTION SENSOR
1523.8 [59.99]
1785.1 [70.28]
2026.4 [79.78]
5398.1 [212.53]
MAIN TANK EMERGENCY VENT 5" NPTF THD
NORMAL VENT
SPARE 2" NPT
BASIN TANK EMERGENCY VENT 5" NPTF THD
VIEW A-A
2415.9 [95.11]
1670.9 [65.78]
288.2 [11.35]
VENT (ON BOTH SIDES)
EMERGENCY STOP BUTTON
1661.9 [65.43]
1151.9 [45.35]
869.0 [34.21]
1993.3 [78.48]
EXCESS FUEL RETURN 13/16-16 THD
FUEL INLET 13/16-16 THD
2944.0 [115.91]
3071.0 [120.91]
LEFT SIDE VIEW
1E2966B IDENT
1E2733 DRAWING-AUTOCAD
1E0198W BRAND MARKINGS
1E0013G CONFIDENTIALITY
1E0012A INTERPRETATION
1E0011 INTPR & TOL
DRN H.ZHAO
CHK M.J. SWIFT
APPD N.P. MOUNTJOY
RECORDS X
SCALE 1 = 16
SHEET 3 OF 3
00 25SEP19
CATERPILLAR INC.
INSTALLATION-COMPOSITE
C15ENCL SA LV2 TANK1000GAL
588-7453
W973
E