METRIC 460–0863

QTY	ENGINE CONNECTIONS	SIZE	SHEET
1	COOLANT DRAIN	13/16–16 THD	2
1	EXCESS FUEL RETURN	1/2–14 NPTF	2
1	EXHAUST	SEE DETAIL A	2
1	FUEL INLET	1/2–14 NPTF	2
1	FUMES DISPOSAL TUBE	ø33.0 [ø1.30] OD	2
1	OIL DRAIN	3/4–16 THD	2

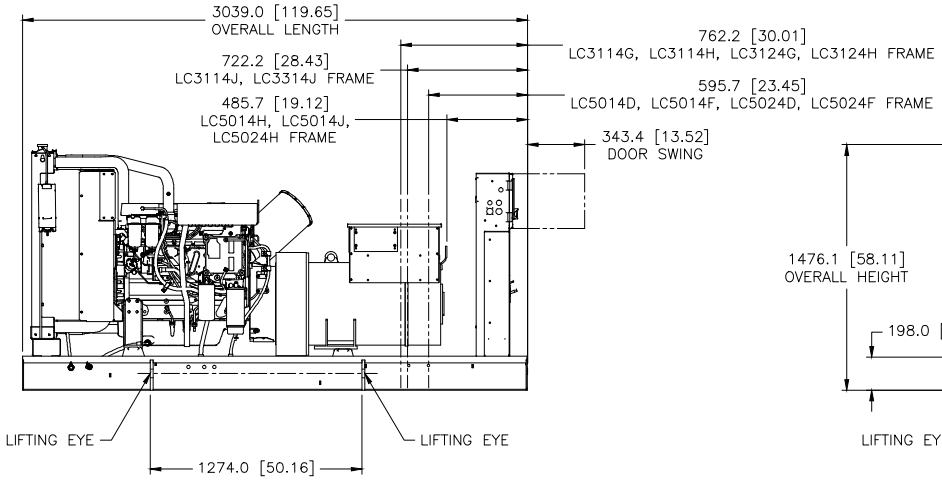

LEFT SIDE VIEW

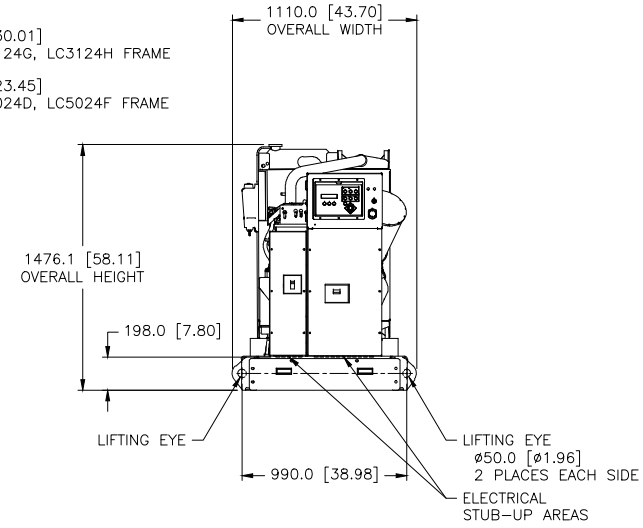

REAR VIEW

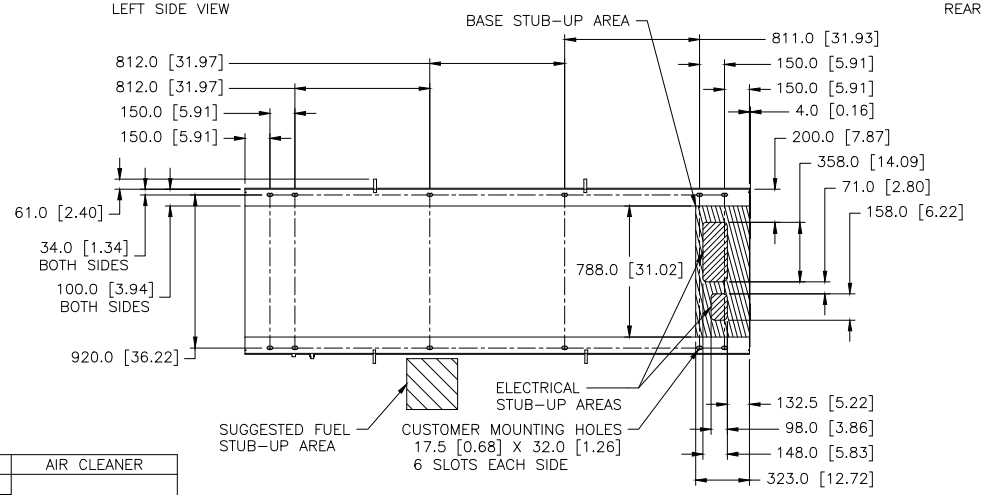

FOOTPRINT
(DIMENSIONED OUTLINE VIEW FROM ABOVE)
(LEFT SIDE ORIENTATION)

MODEL	TYPE	PRICING AR	AIR CLEANER
C7.1	Y	LS–2090 CHG 04	LS–1799 CHG 01
		LS–2091 CHG 04	
		LS–2092 CHG 04	
		LS–2093 CHG 04	
		LS–2604 CHG 04	
		LS–2605 CHG 04	
		LS–2606 CHG 04	
		LS–2607 CHG 04	

PACKAGE LIFTED IN 4 PLACES

PACKAGE SHOWN WITH MORE DETAIL ON SHEET 2

REV		
	1E2966B	IDENT
	1E2733	DRAWING–AUTOCAD
	1E0195W	BRAND MARKINGS
	1E0013C	CONFIDENTIALITY
	1E0012A	INTERPRETATION
	1E0011	INTPR & TOL

	SPEC NO.	NAME
DRN	J.O. SCHAIDLE	
CHK	M.J. SWIFT	
APPD	N.P. MOUNTJOY	
CHG		
EDIT	EXP / PROD	
OTHER	RECORDS X	

UNLESS OTHERWISE SPECIFIED:
DIMENSIONS ARE IN MM [INCH]
DIMENSIONS W/O TOL ARE BASIC

SCALE 1 = 10
DIMENSIONS: IN [MM]
SHEET 1 OF 2
THIRD ANGLE PROJECTION
CHG 04 11MAY18 DATE

CATERPILLAR INC.

THE INFORMATION HEREON IS THE PROPERTY OF CATERPILLAR INC. AND ITS SUBSIDIARIES AND MAY NOT BE REPRODUCED, OR DISCLOSED TO OTHERS IN PUBLISHED OR PRINTED FORM WITHOUT WRITTEN PERMISSION.

INSTALLATION–COMPOSITE
C7.1 OPEN W/O FUEL TANK

460–0863 | LVR – | DES 24 SUB | CONTROL W598 | E