METRIC 460–0873

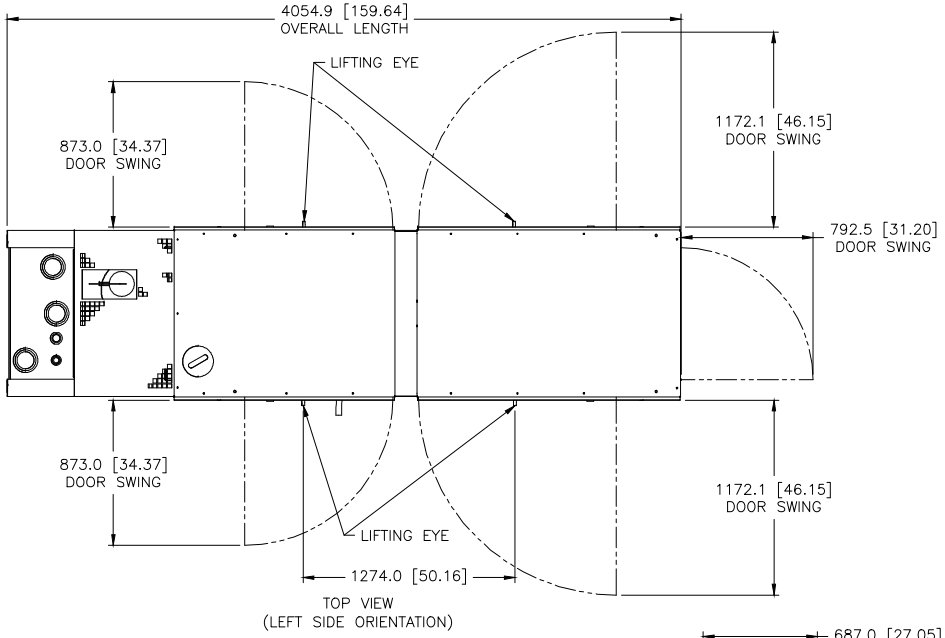

TOP VIEW
(LEFT SIDE ORIENTATION)

QTY	ENGINE CONNECTIONS	SIZE	SHEET
1	COOLANT DRAIN	13/16–16 THD	2
1	EXHAUST	ø123.7 [ø4.87] OD	2
1	OIL DRAIN	3/4–16 THD	2

QTY	POSSIBLE TANK CONNECTIONS	SIZE	SHEET
1	BASIN TANK EMERGENCY VENT	4" NPT THD	2
1	FUEL FILLER	4" NPT THD	2
1	FUEL LEVEL GAUGE	1 1/4" NPT THD	2
1	FUEL RETURN	1/2" NPT THD	2
1	FUEL SUPPLY	1/2" NPT THD	2
1	MAIN TANK EMERGENCY VENT	4" NPT THD	2
1	NORMAL VENT	1 1/4" NPT THD	2
1	RUPTURE BASIN ALARM	1" NPT THD	2
2	SPARE PORT	1" NPT THD	2

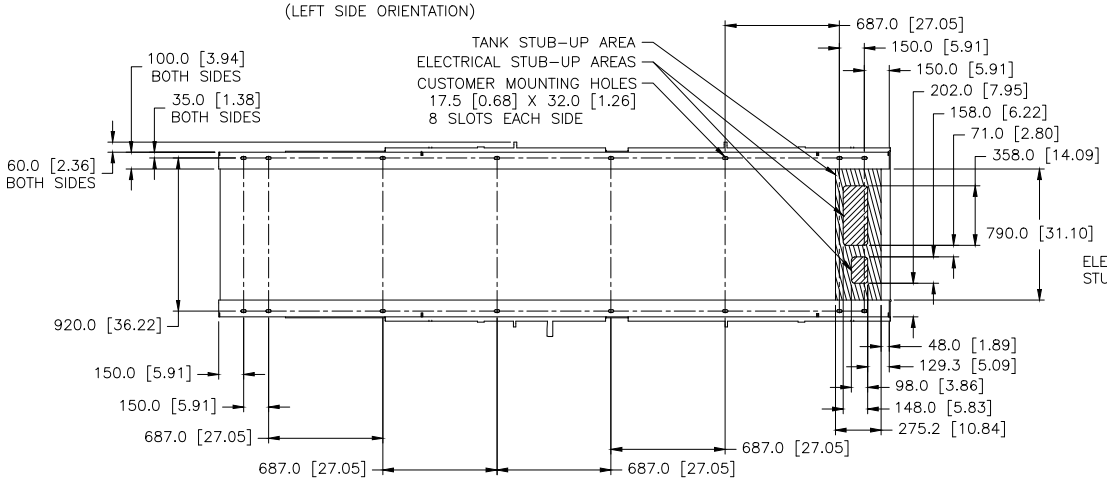

FOOTPRINT
(DIMENSIONED OUTLINE VIEW FROM ABOVE)
(LEFT SIDE ORIENTATION)

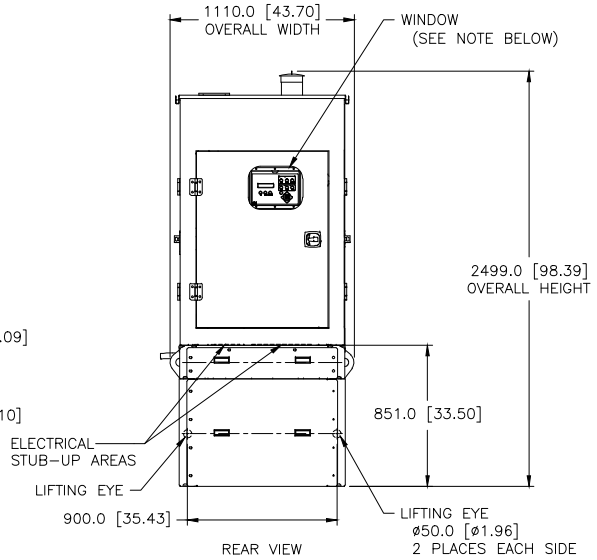

REAR VIEW

MODEL	TYPE	PRICING AR	ENCLOSURE	TANK
C7.1	Y	LS–2090 CHG 04	LS–1037 CHG 02	LS–1068 CHG 05
		LS–2091 CHG 04	LS–1041 CHG 03	
		LS–2092 CHG 04	LS–1047 CHG 04	
		LS–2093 CHG 04	LS–1051 CHG 03	
		LS–2604 CHG 04	LS–2482 CHG 00	
		LS–2605 CHG 04		
		LS–2606 CHG 04		
		LS–2607 CHG 04		

MODEL	TYPE	PRICING AR	ENCLOSURE	TANK
C7.1	Y	LS–2095 CHG 03	LS–1036 CHG 03	LS–1068 CHG 05
		LS–2096 CHG 03	LS–1040 CHG 03	
		LS–2608 CHG 03	LS–1046 CHG 04	
		LS–2609 CHG 03	LS–1050 CHG 03	
		LS–2610 CHG 03	LS–2481 CHG 00	
		LS–2611 CHG 04		
		LS–2612 CHG 04		
		LS–2613 CHG 04		

NOTE:
WINDOW IS NOT INCLUDED ON LS–1036, LS–1037, LS–1046, LS–1047, LS–2481, LS–2482

PACKAGE LIFTED IN 4 PLACES

PACKAGE SHOWN WITH MORE DETAIL ON SHEET 2

REV		
	1E2966B	IDENT
	1E2733	DRAWING–AUTOCAD
	1E0198W	BRAND MARKINGS
	1E0013C	CONFIDENTIALITY
	1E0012A	INTERPRETATION
	1E0011	INTPR & TOL

REV	SPEC NO.	NAME
DRN	L. FENG	
CHK	M.J. SWIFT	
APPD	N.P. MOUNTJOY	
PROJ ENGR		
OTHER	RECORDS	X

UNLESS OTHERWISE SPECIFIED
DIMENSIONS ARE IN MM [INCH]
DIMENSIONS W/O TOL ARE BASIC
SCALE 1 = 10
DIMENSIONS: mm [in]
SHEET 1 OF 2
THIRD ANGLE PROJECTION
07 20SEP18
CHG DATE

CATERPILLAR INC.

THE INFORMATION HEREON IS THE PROPERTY OF CATERPILLAR INC. AND ITS SUBSIDIARIES WITHOUT WRITTEN PERMISSION, NO COPYING, DISCLOSURE OR USE OF THIS DRAWING OR INFORMATION HEREON IS PERMITTED.

INSTALLATION–COMPOSITE
C7.1 ENCL SALT & 2 408G TNK

460–0873 | USR – | CONTROL DES 24 SUB W598 | E