METRIC 486–7761

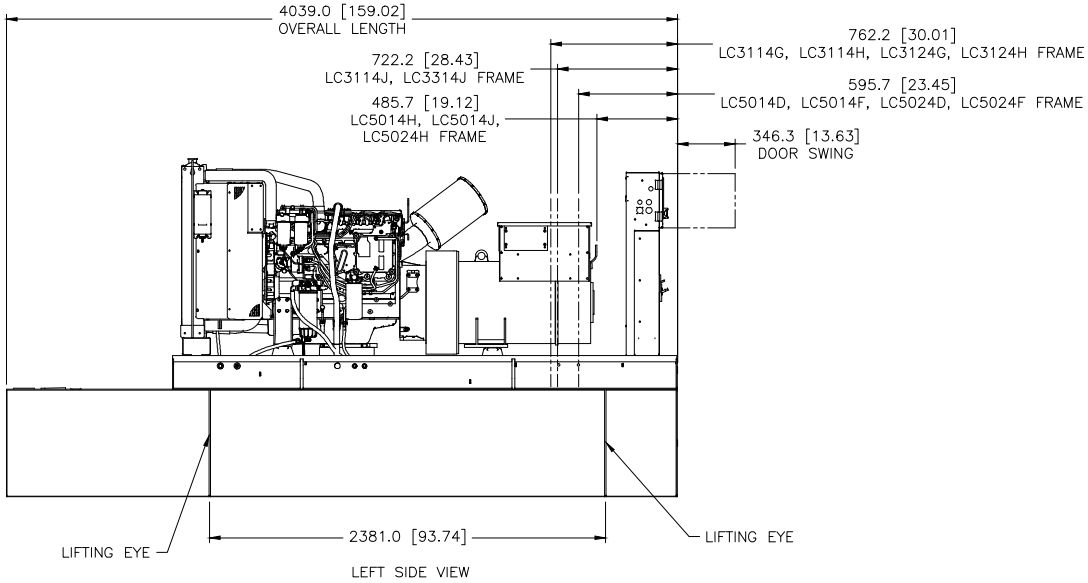

LEFT SIDE VIEW

QTY	ENGINE CONNECTIONS	SIZE	SHEET
1	COOLANT DRAIN	13/16–16 THD	2
1	EXHAUST	SEE DETAIL A	2
1	FUMES DISPOSAL TUBE	ø25.4 [ø1.00] OD	2
1	OIL DRAIN	3/4–16 THD	2

QTY	POSSIBLE TANK CONNECTIONS	SIZE	SHEET
1	BASIN TANK EMERGENCY VENT	4" NPT THD	3
1	FUEL FILLER	4" NPT THD	3
1	FUEL LEVEL GAUGE	1 1/4" NPT THD	3
1	FUEL RETURN	1/2" NPT THD	3
1	FUEL SUPPLY	1/2" NPT THD	3
1	MAIN TANK EMERGENCY VENT	4" NPT THD	3
1	NORMAL VENT	1 1/4" NPT THD	3
1	RUPTURE BASIN ALARM	1" NPT THD	3
2	SPARE PORT	1" NPT THD	3

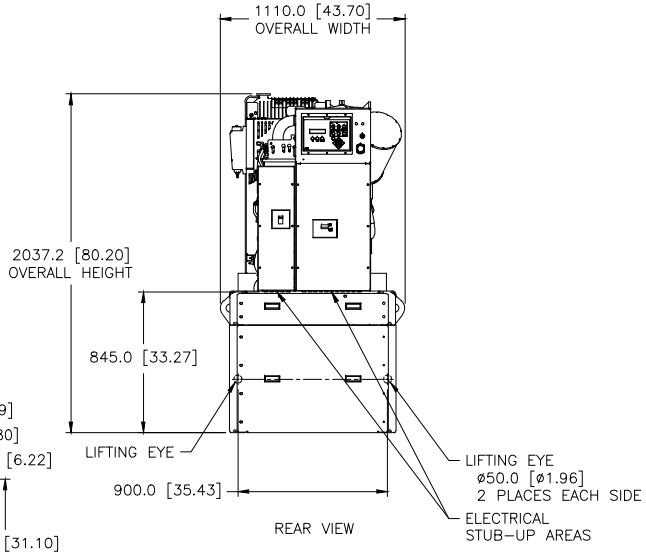

REAR VIEW

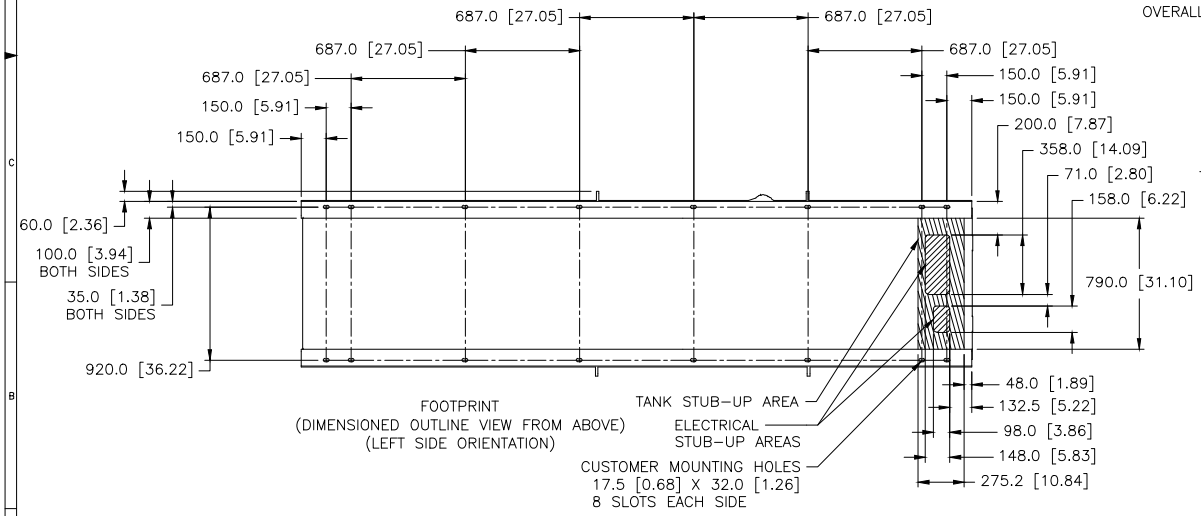

FOOTPRINT
(DIMENSIONED OUTLINE VIEW FROM ABOVE)
(LEFT SIDE ORIENTATION)

MODEL	TYPE	PRICING AR	AIR CLEANER	TANK
C7.1	Y	LS–2096 CHG 03	LS–1799 CHG 01	LS–1068 CHG 05
		LS–2095 CHG 03		
		LS–2608 CHG 03		
		LS–2611 CHG 04		
		LS–2609 CHG 03		
		LS–2612 CHG 04		
		LS–2610 CHG 03		
		LS–2613 CHG 04		

PACKAGE LIFTED IN 4 PLACES

PACKAGE SHOWN WITH MORE DETAIL ON SHEET 2

1E2966B IDENT
1E2733 DRAWING–AUTOCAD
1E0198W BRAND MARKINGS
1E0013G CONFIDENTIALITY
1E0012A INTERPRETATION
1E0011 INTPR & TOL

DRN M.J. SWIFT
CHK M.J. SWIFT
APPD N.P. MOUNTJOY
OTHER RECORDS X
UNLESS OTHERWISE SPECIFIED
DIMENSIONS ARE IN MM [INCH]
DIMENSIONS W/O TOL ARE BASIC
SCALE 1 = 10
SHEET 1 OF 3
THIRD ANGLE PROJECTION
03 27MAY18
CATERPILLAR INC.
INSTALLATION–COMPOSITE
C7.1 OPEN W/405 GAL TANK
486–7761 – W598 E