METRIC 528-6779

QTY	ENGINE CONNECTIONS	SIZE	SHEET
1	COOLANT DRAIN	1/4-18 THD	2
1	EXHAUST	ø63.3 [ø2.49]	2
1	OIL DRAIN	1/4-18 THD	2

QTY	POSSIBLE TANK CONNECTIONS	SIZE	SHEET
1	BASIN TANK EMERGENCY VENT	3" NPT THD	3
1	FUEL FILLER	4" NPT THD	3
1	MAIN TANK EMERGENCY VENT	3" NPT THD	3
1	NORMAL VENT	2" NPT THD	3
1	RUPTURE BASIN ALARM	1" NPTF THD	3
2	SPARE PORT	1" NPTF THD	3

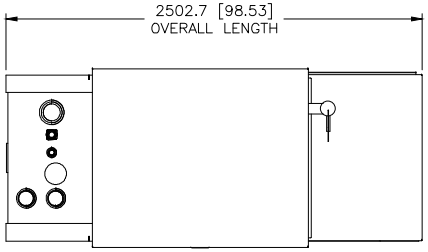

TOP VIEW

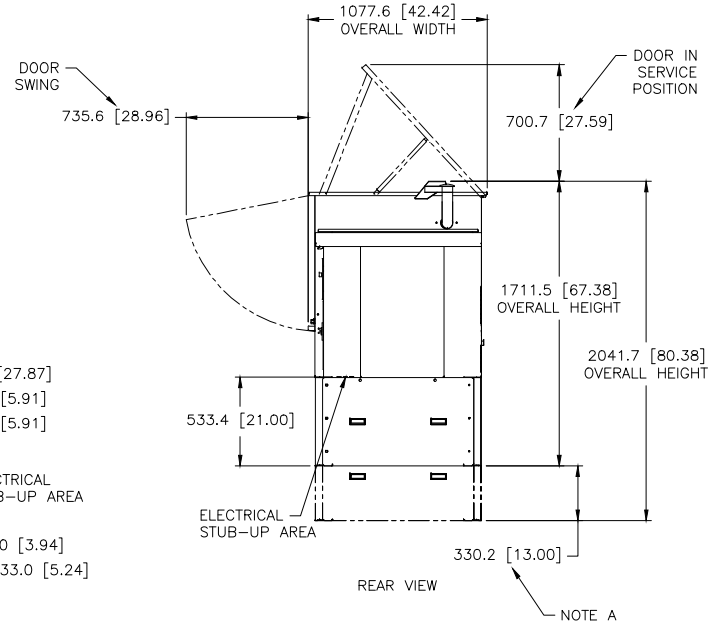

REAR VIEW

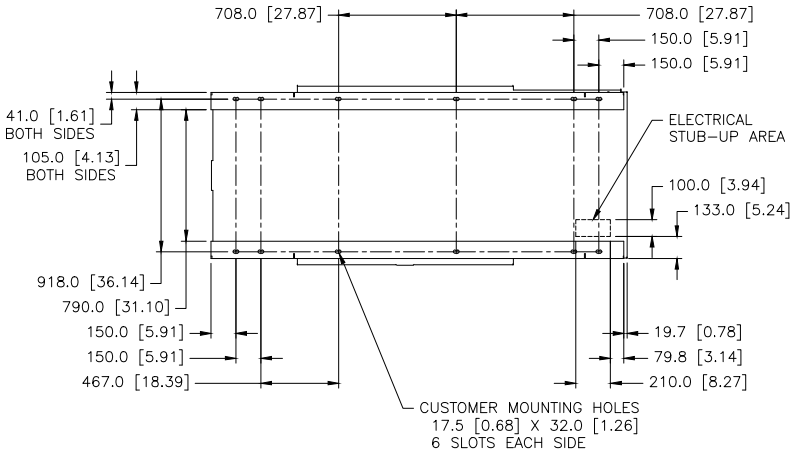

FOOTPRINT
(DIMENSIONED OUTLINE VIEW FROM ABOVE)

MODEL	TYPE	PRICING AR	ENCLOSURES	TANK GROUP	TANK CAPACITY
C4.4	Y	LS-2635 CHG 02	LS-2425 CHG 02	LS-2410 CHG 02	137 US GAL
		LS-2636 CHG 02	LS-2426 CHG 02		
		LS-3096 CHG 01	LS-2433 CHG 01	LS-2411 CHG 03	255 US GAL
		LS-3097 CHG 01	LS-2434 CHG 01		
		LS-3098 CHG 01			
		LS-3099 CHG 01			

NOTE A: DIM FROM THE BOTTOM OF THE 137 US GAL TANK TO THE BOTTOM OF THE 255 US GAL TANK

REV	SPEC NO.	NAME
	1E2966B	IDENT
	1E2733	DRAWING-AUTOCAD
	1E0198W	BRAND MARKINGS
	1E0013C	CONFIDENTIALITY
	1E0012A	INTERPRETATION
	1E0011	INTPR & TOL

DRN J.O. SCHAIDLE
CHK M.J. SWIFT
APPD N.P. MOUNTJOY
DIMENSIONS ARE IN MM [INCH]
DIMENSIONS W/O TOL ARE BASIC
SCALE 1 = 10
SHEET 1 OF 3
THIRD ANGLE PROJECTION
01 29JUN18
CATERPILLAR INC.
INSTALLATION-COMPOSITE
C4.4 ENCL W/ INTEGRAL TANK
528-6779 - DES 24 SUB W598 E