METRIC 548-8607

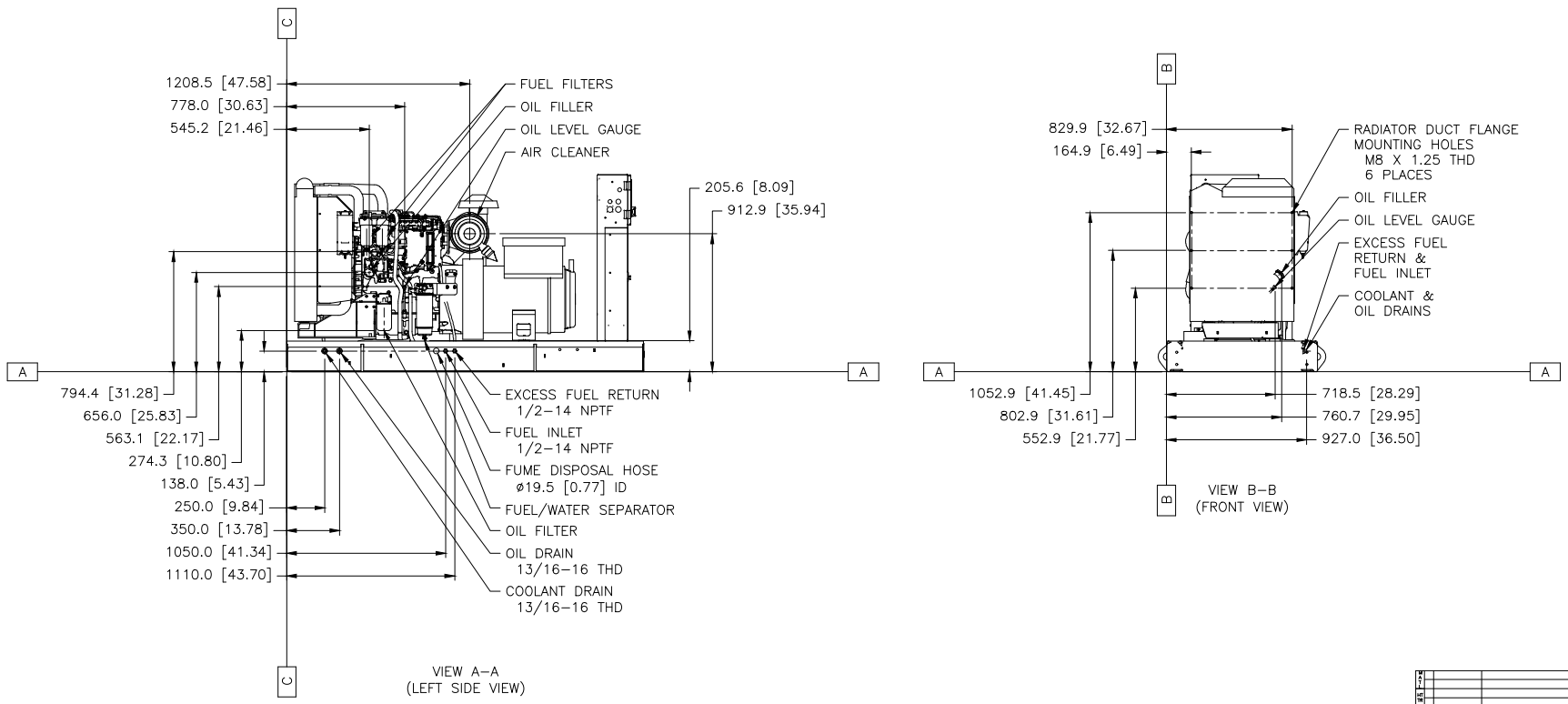

1E2966B	IDENT
1E2733	DRAWING-AUTOCAD
1E0198W	BRAND MARKINGS
1E0013G	CONFIDENTIALITY
1E0012A	INTERPRETATION
1E0011	INTPR & TOL
SPEC NO.	NAME
DRN	J.O. SCHAIDLE
CHK	M.J. SWIFT
APPD	N.P. MOUNTJOY
CONT EXPT	EXP / PROD / PROD
OTHER	RECORDS X

UNLESS OTHERWISE SPECIFIED
DIMENSIONS ARE IN MM [INCH]
DIMENSIONS W/O TOL ARE BASIC

SCALE 1 = 10
SHEET 3 OF 3

THIRD ANGLE PROJECTION

01 06MAR19
CHG DATE

CATERPILLAR INC.

THE INFORMATION CONTAINED IN THE PROPERTY OF CATERPILLAR INC. AND/OR ITS SUBSIDIARIES WITHOUT WRITTEN PERMISSION, ANY SUPPLIES, TRANSMITTAL TO OTHERS, AND ANY USE EXCEPT THAT FOR WHICH IT IS LOANED IS PROHIBITED.

INSTALLATION-COMPOSITE
C4.4 OPEN W/O FUEL TANK

548-8607 | VER - | DES DO SUB | CONTROL W598 | E