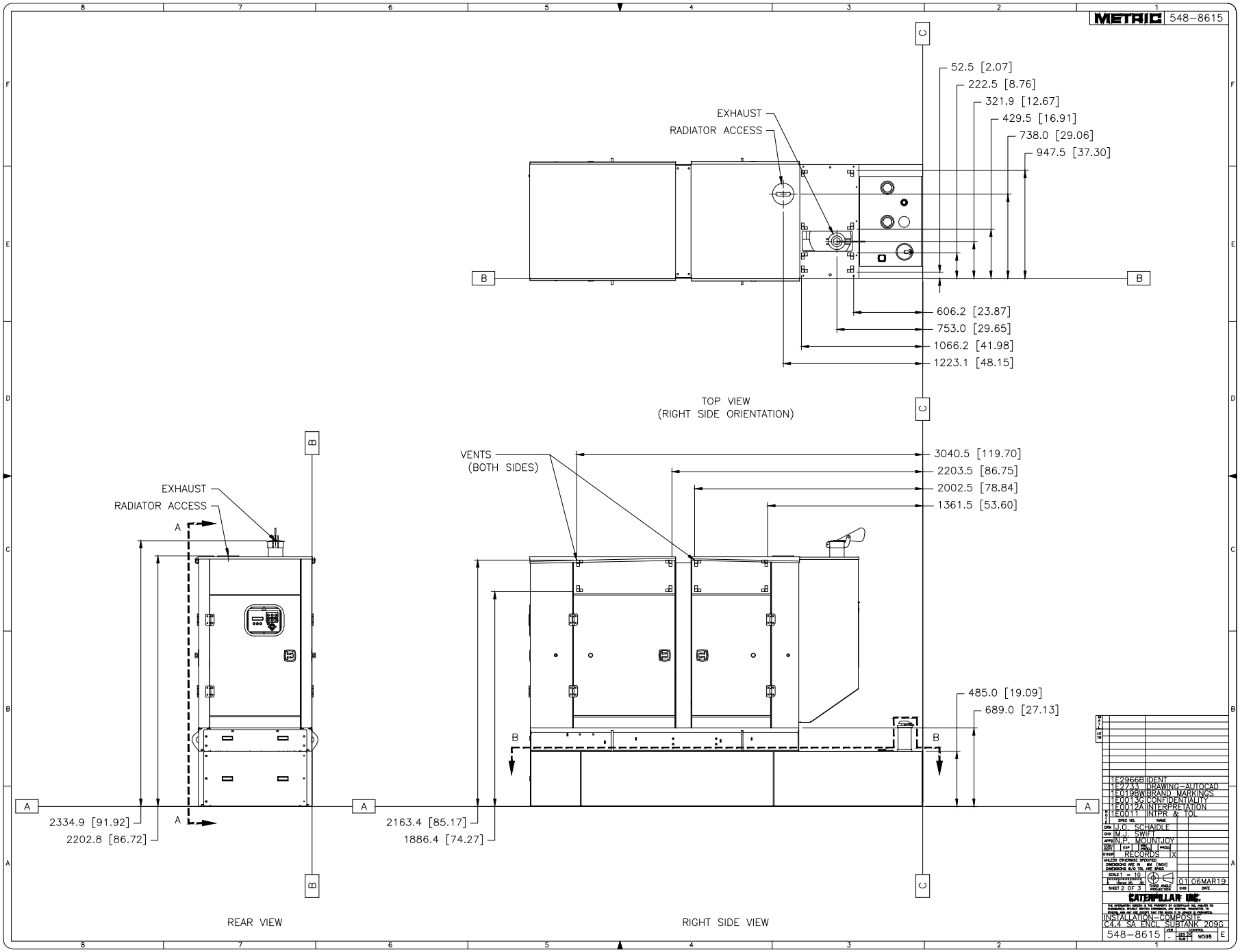
METRIC 548-8615
EXHAUST
RADIATOR ACCESS
52.5 [2.07]
222.5 [8.76]
321.9 [12.67]
429.5 [16.91]
738.0 [29.06]
947.5 [37.30]
606.2 [23.87]
753.0 [29.65]
1066.2 [41.98]
1223.1 [48.15]
TOP VIEW
(RIGHT SIDE ORIENTATION)
VENTS
(BOTH SIDES)
3040.5 [119.70]
2203.5 [86.75]
2002.5 [78.84]
1361.5 [53.60]
485.0 [19.09]
689.0 [27.13]
2334.9 [91.92]
2202.8 [86.72]
2163.4 [85.17]
1886.4 [74.27]
REAR VIEW
RIGHT SIDE VIEW
1E2966B IDENT
1E2733 DRAWING-AUTOCAD
1E0198W BRAND MARKINGS
1E0013G CONFIDENTIALITY
1E0012A INTERPRETATION
1E0011 INTPR & TOL
SPEC NO. NAME
DRN J.O. SCHAIDLE
CHK M.J. SWIFT
APPD N.P. MOUNTJOY
CHG 01 06MAR19
DATE
CATERPILLAR INC.
INSTALLATION-COMPOSITE
C4.4 SA ENCL SUBTANK 209G
548-8615
W598
E