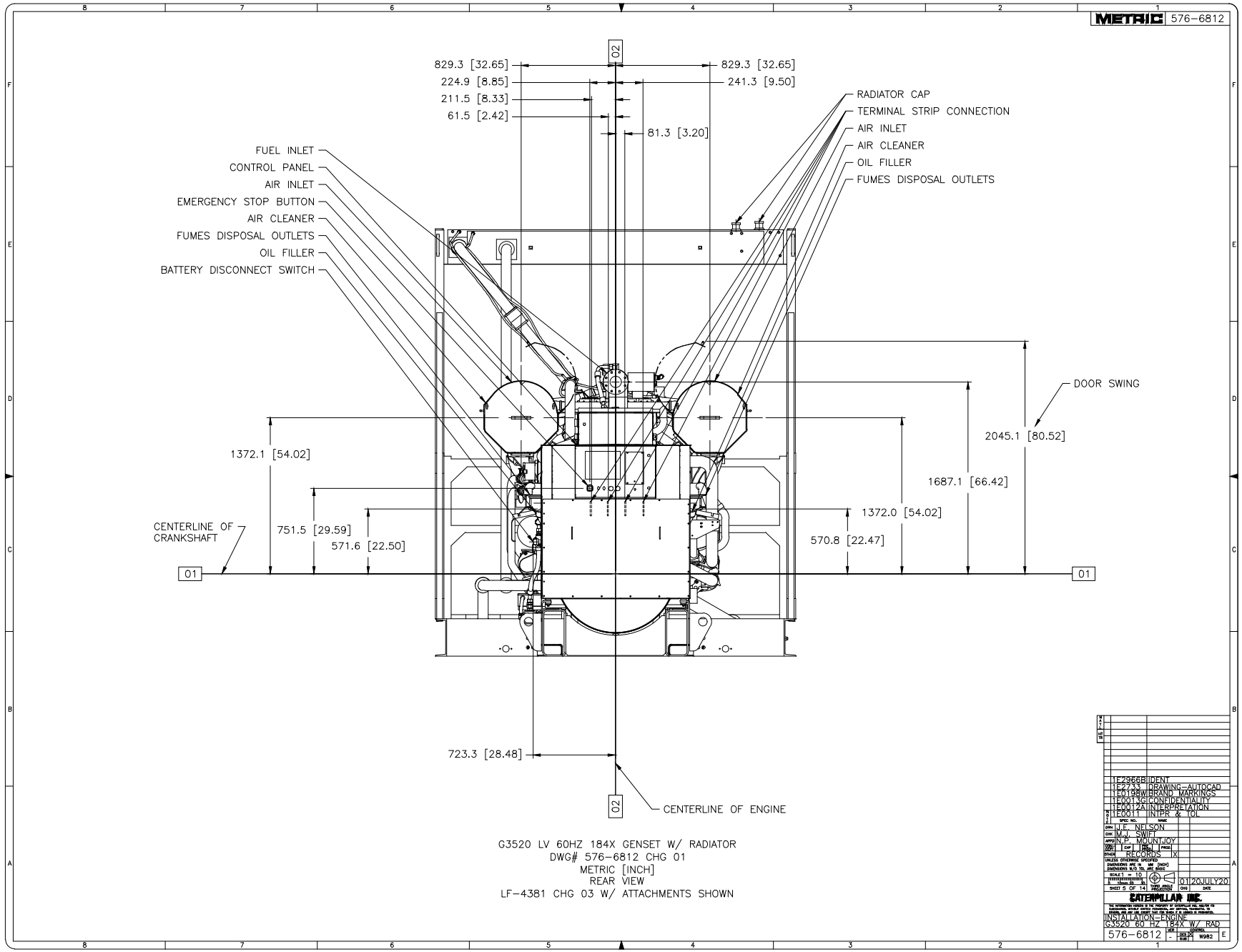

G3520 LV 60HZ 184X GENSET W/ RADIATOR
DWG# 576-6812 CHG 01
METRIC [INCH]
REAR VIEW
LF-4381 CHG 03 W/ ATTACHMENTS SHOWN