METRIC 579-6101

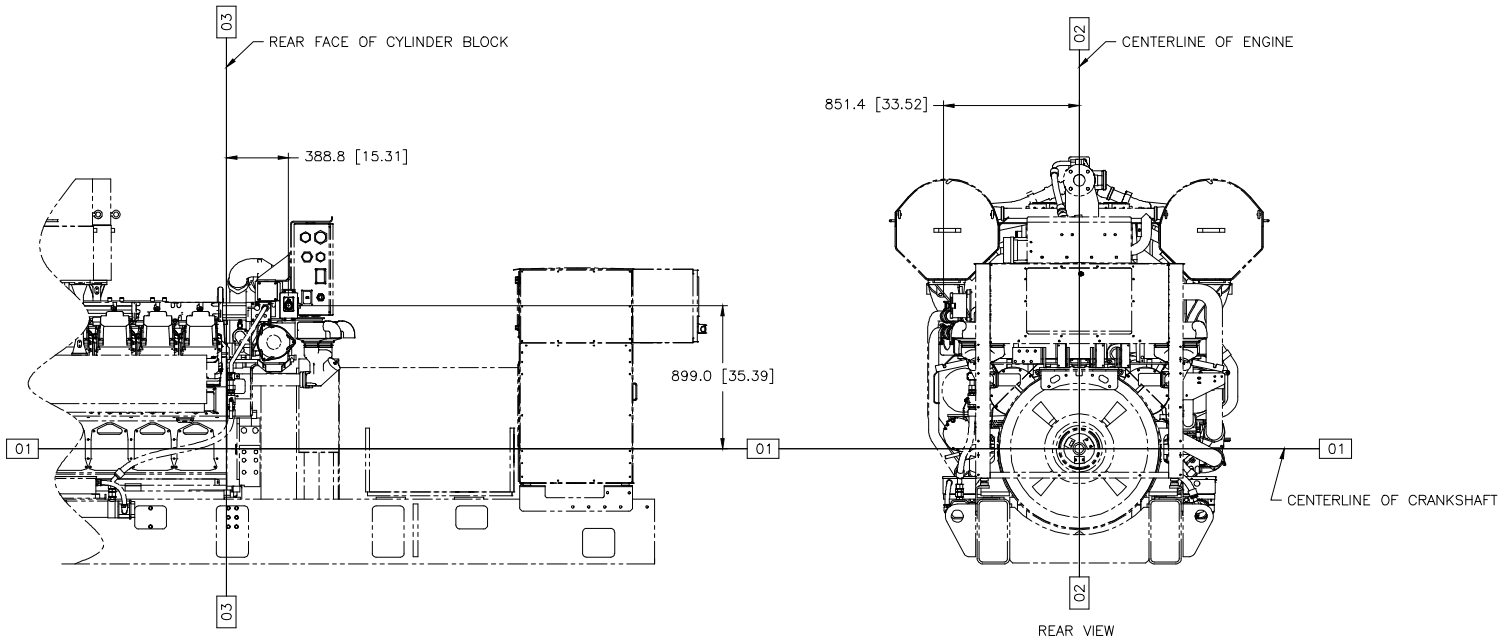

DETAIL OF EMERGENCY STOP BUTTON

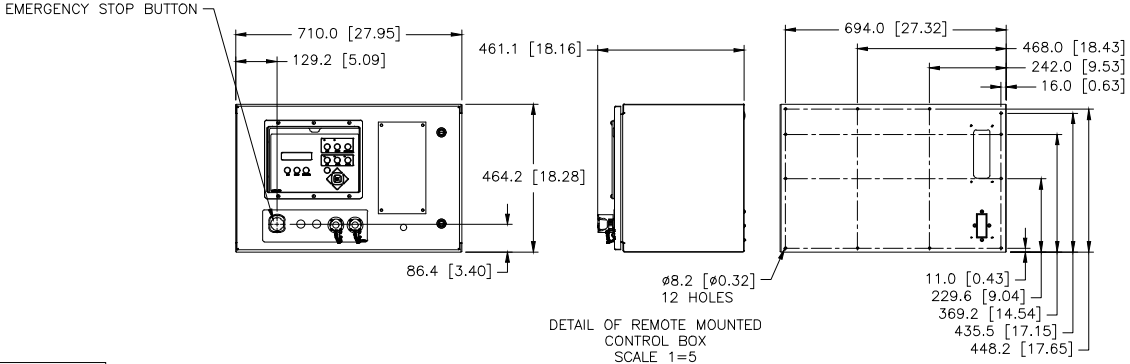

DETAIL OF REMOTE MOUNTED
CONTROL BOX
SCALE 1=5

MODEL	TYPE	PRICING AR
G3520	–	LF-4104 CHG 01

NO	SPEC NO.	NAME
1	1E2966B	IDENT
2	1E2733	DRAWING-AUTOCAD
3	1E0198W	BRAND MARKINGS
4	1E0013G	CONFIDENTIALITY
5	1E0012A	INTERPRETATION
6	1E0011	INTPR & TOL

DRN J.E. NELSON
CHK M.J. SWIFT
APPD N.P. MOUNTJOY
CHK CAP PROJ PROD
STAGE RECORDS IX
UNLESS OTHERWISE SPECIFIED
DIMENSIONS ARE IN MM [INCH]
DIMENSIONS W/O TOL ARE BASIC
SCALE 1 = 10
SHEET 10 OF 14
THIRD ANGLE PROJECTION
01 04AUG20
CHG DATE

CATERPILLAR INC.

THE INFORMATION CONTAINED IN THIS PROPERTY OF CATERPILLAR INC. AND/OR ITS SUBSIDIARIES AND/OR AFFILIATES CONTAINED, ANY INFORMATION CONTAINED HEREIN IS PROHIBITED.

INSTALLATION-ENGINE
G3520 60HZ 186X W/ RAD

579-6101 | LEFT - | DES 24 SUB | CONTROL W982 | E