METRIC 579-6101

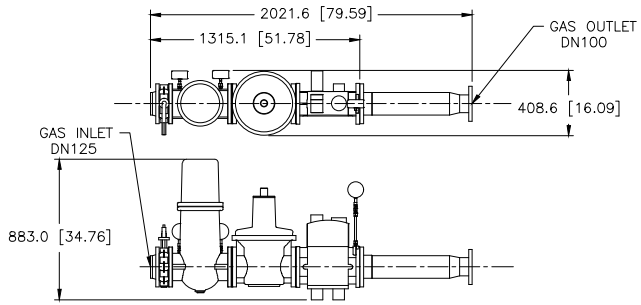

TECHNICAL SPECIFICATIONS	
GAS TYPE	NATURAL GAS AT 60°F
GAS LHV	800 BTU/SCFH
FLOW RATE	30,000 SCFH
INLET PRESSURE	2.5 TO 7 PSI
OUTLET PRESSURE	1.8 TO 2.6 PSI
MAX POWER	315 VA
VOLTAGE / NEMA-1P	24VDC NEMA 12
MAX ALLOWABLE PRESSURE	7 PSIG
INSTALLATION	INDOOR
AMBIENT TEMPERATURE	+5°F TO +140°F
NORMATIVE BASE	NFPA 37:2015
PED 2014/168 / ATEX 94/9	NA
PAINT FINISH (PIPEWORK)	NA
NET WEIGHT	355.7 kg

DETAIL OF 545-8329 CHG 01
GAS TRAIN

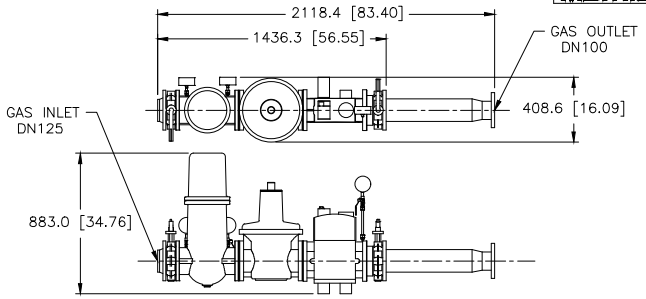

TECHNICAL SPECIFICATIONS	
GAS TYPE	NATURAL GAS AT 60°F
GAS LHV	800 BTU/SCFH
FLOW RATE	30,000 SCFH
INLET PRESSURE	2.5 TO 7 PSI
OUTLET PRESSURE	1.8 TO 2.6 PSI
MAX POWER	315 VA
VOLTAGE / NEMA-1P	24VDC NEMA 12
MAX ALLOWABLE PRESSURE	7 PSIG
INSTALLATION	INDOOR
AMBIENT TEMPERATURE	+5°F TO +140°F
NORMATIVE BASE	CSA B149.3:2015
PED 2014/168 / ATEX 94/9	NA
PAINT FINISH (PIPEWORK)	NA
NET WEIGHT	372.3 kg

DETAIL OF 545-8330 CHG 01
GAS TRAIN

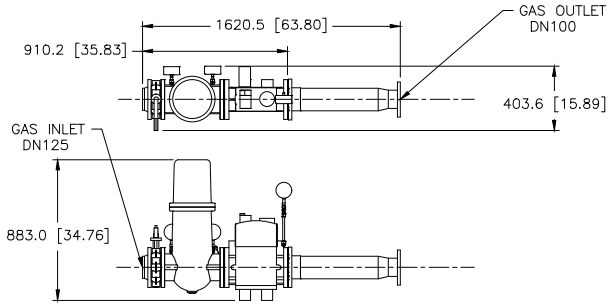

TECHNICAL SPECIFICATIONS	
GAS TYPE	NATURAL GAS AT 60°F
GAS LHV	800 BTU/SCFH
FLOW RATE	30,000 SCFH
INLET PRESSURE	0.9 TO 2.5 PSI
OUTLET PRESSURE	INLET-0.5 PSI
MAX POWER	315 VA
VOLTAGE / NEMA-1P	24VDC NEMA 12
MAX ALLOWABLE PRESSURE	7 PSIG
INSTALLATION	INDOOR
AMBIENT TEMPERATURE	+5°F TO +140°F
NORMATIVE BASE	NFPA 37:2015
PED 2014/168 / ATEX 94/9	NA
PAINT FINISH (PIPEWORK)	NA
NET WEIGHT	324.3 kg

DETAIL OF 558-1557 CHG 01
GAS TRAIN

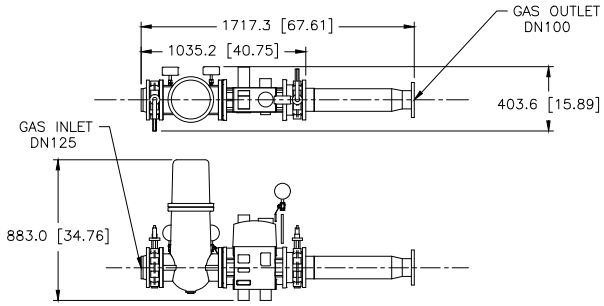

TECHNICAL SPECIFICATIONS	
GAS TYPE	NATURAL GAS AT 60°F
GAS LHV	800 BTU/SCFH
FLOW RATE	30,000 SCFH
INLET PRESSURE	0.9 TO 2.5 PSI
OUTLET PRESSURE	INLET-0.5 PSI
MAX POWER	315 VA
VOLTAGE / NEMA-1P	24VDC NEMA 12
MAX ALLOWABLE PRESSURE	7 PSIG
INSTALLATION	INDOOR
AMBIENT TEMPERATURE	+5°F TO +140°F
NORMATIVE BASE	CSA B149.3:2015
PED 2014/168 / ATEX 94/9	NA
PAINT FINISH (PIPEWORK)	NA
NET WEIGHT	341.1 kg

DETAIL OF
558-1558 CHG 01
GAS TRAIN

REVISIONS

REV	SPEC NO.	NAME
1	1E2966B	IDENT
1	1E2733	DRAWING-AUTOCAD
1	1E0198W	BRAND MARKINGS
1	1E0013G	CONFIDENTIALITY
1	1E0012A	INTERPRETATION
1	1E0011	INTPR & TOL

DRN J.E. NELSON
CHK M.J. SWIFT
APPD N.P. MOUNTJOY
CODE
STAGE RECORDS X
UNLESS OTHERWISE SPECIFIED DIMENSIONS ARE IN MM (INCH) DIMENSIONS W/O TOL ARE BASIC
SCALE 1 = 10
THIRD ANGLE PROJECTION
SHEET 14 OF 14
01 04AUG20
CATERPILLAR INC.
THE INFORMATION HEREON IS THE PROPERTY OF CATERPILLAR INC. AND/OR ITS AFFILIATES AND MAY BE PROTECTED BY PATENT, COPYRIGHT, TRADE SECRET, OR OTHER INTELLECTUAL PROPERTY RIGHTS. REPRODUCTION OR USE WITHOUT PERMISSION IS PROHIBITED.
INSTALLATION-ENGINE
G3520 60HZ 186X W/ RAD
579-6101
W982
E